Investigation of radiation dose and flux dynamics inside the spherical tissue equivalent phantom on the Russian segment of ISS by Liulin-5 active dosemeter

J. Semkova, P. Baynov*, R. Koleva*, N. Kanchev*, V. Petrov #, V. Shurshakov#, V. Benghin#, I. Tchhernykh #, Yu. Akatov #, V. Redko #, Yu. Ivanov#*

** Solar-Terrestrial Influences Laboratory Bulgarian Academy of Sciences Acad. G. Bonchev Str. Block 3, 1113, Sofia, Bulgaria, e-mail: jepero@stil.acad.bg*

#SSCRF-IBMP, *Khoroshovskoye sh. 76-A, 123007, Moscow, Russia, e-mail: shurshakov@mmcc.ibmp.rssi.ru*

Abstract

Liulin-5 active dosimeter is a part of the Matroshka-R experiment on the Russian segment of ISS.

The Matroshka-R aims are:

- Long term measurements of dose rates from all space radiation sources in different points inside the phantoms located on the ISS external surface and inside the Russian module and study of depth dose distribution at the sites of critical organs of the human body, using anthropomorphic and spherical phantoms;
- Measurements of the radiation spectral and angular distributions inside and outside ISS;
- Assessment and verification of the shielding characteristic of the spacecraft;
- Improvement of the radiation fields models for the ISS trajectory and forecast of the radiation field dynamics during disturbed conditions.

Simultaneously it is planned to use both active and passive detectors for measurement of different types of radiation.

The aim of Liulin-5 experiment is (4-5 years) investigation of the radiation environment dynamics inside the spherical phantom, mounted in different compartments.

Liulin-5 instrument will measure the energy loss spectra, flux and dose rates with near real time resolution simultaneously at different depths of the spherical phantom.

Data obtained together with data from other active and passive dosimeters will be used to:

1) Estimate the radiation risk to the crewmembers; 2) Verify the models of radiation environment in low Earth orbit; 3) Validate and improve the radiation transport assessment methods through shielding materials and through different tissues.

Liulin-5 description

Two different units:

1) Detectors module inside the phantom mounted in a tube with dimensions 190x25 mm;
2) Electronic block outside the phantom.

Developed are 2 versions of Liulin-5:

1) Detectors module of 3 silicon detectors, placed in parallel planes at different depths to measure the dose depth distribution;
2) Detectors module of 2 silicon detectors arranged as a telescope to measure the LET spectra (SSDT). The dose depth distribution is measured by periodical changing the position of the detector telescope inside the phantom.

In both versions charge-sensitive preamplifiers–pulse shapers (CSA) and detector bias are also in this module.

The electronic block is a handheld device:

- Two step pulse height amplification with A/D conversion is used to measure the energy loss spectra and LET;
- A coincidence technique is used to provide directional information and define the pathlength of particles through the detectors and to separate the coincidence events in the second version of the detectors module;
- The microcontroler accumulates the data measured, controls the operation of Liulin-5 and communicates with the telemetry - telecontrol module;
- Autonomous operation with battery power supply and accumulating the data from 7 days measurement in flash memory for later transferring to PC or TM. Real-time clock, keyboard and LCD display are incorporated in the electronic block for the instrument operation control;
- Interfaces to PC and TM.

Liulin-5 parameters

Both versions:

Energy loss spectra in the range: 0.06-100 MeV in 512 channels;

Intensity of the particle flux in the range: 0 - 800 particles/(cm^2 sec);

Absorbed dose rate in the range: 0.04 $x10^{-6}$ Gy/h - 0,05 Gy/h;

The above parameters are for each one of the detectors.

Second version:

LET spectra in the range 0.2-300 keV/u in 512 channels;

Low LET (LLET)– in the range 0.2-10 keV/u;

High LET (HLET) in the range 10-300 keV/u.

Liulin-5 modes and data

Time resolution: 10 sec, 60 sec, 300 sec, 1 hour; Standard mode-60 sec. Switching between modes – automatically or manually.

The output Liulin - 5 data in both modifications contains time of the measurement, operational mode and measured data.

Data are stored in 3 Mbyte flash memory.

Fig. 6. Filled-in phantom shell without jacket.

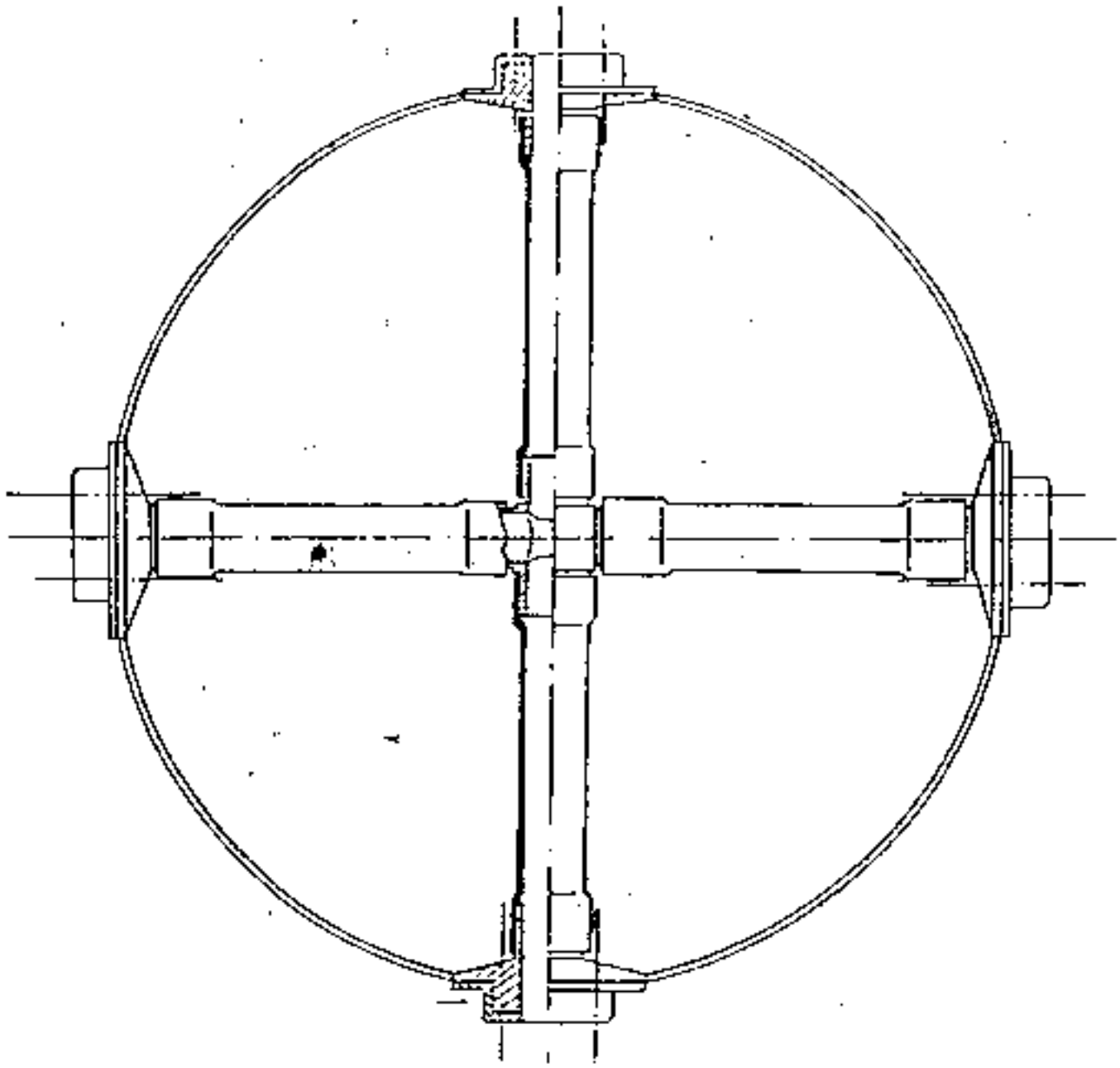

CROSS SECTION OF THE PHANTOM SHELL

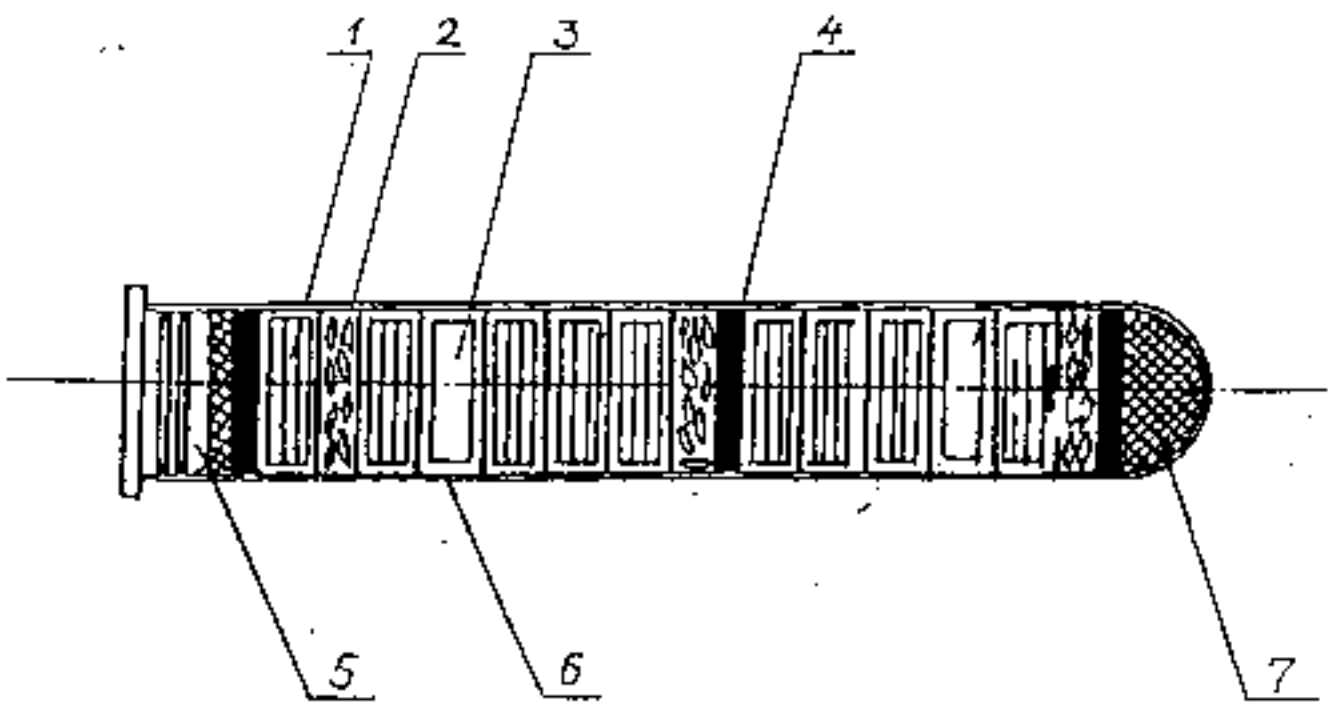

DOSIMETRIC CONTAINER

1. Thermoluminescent detectors (TLD), 2. Capsules with dry seeds, 3. Sets of track detectors, 4. Container lid, 5. Container casing, 6. Soft interlayers

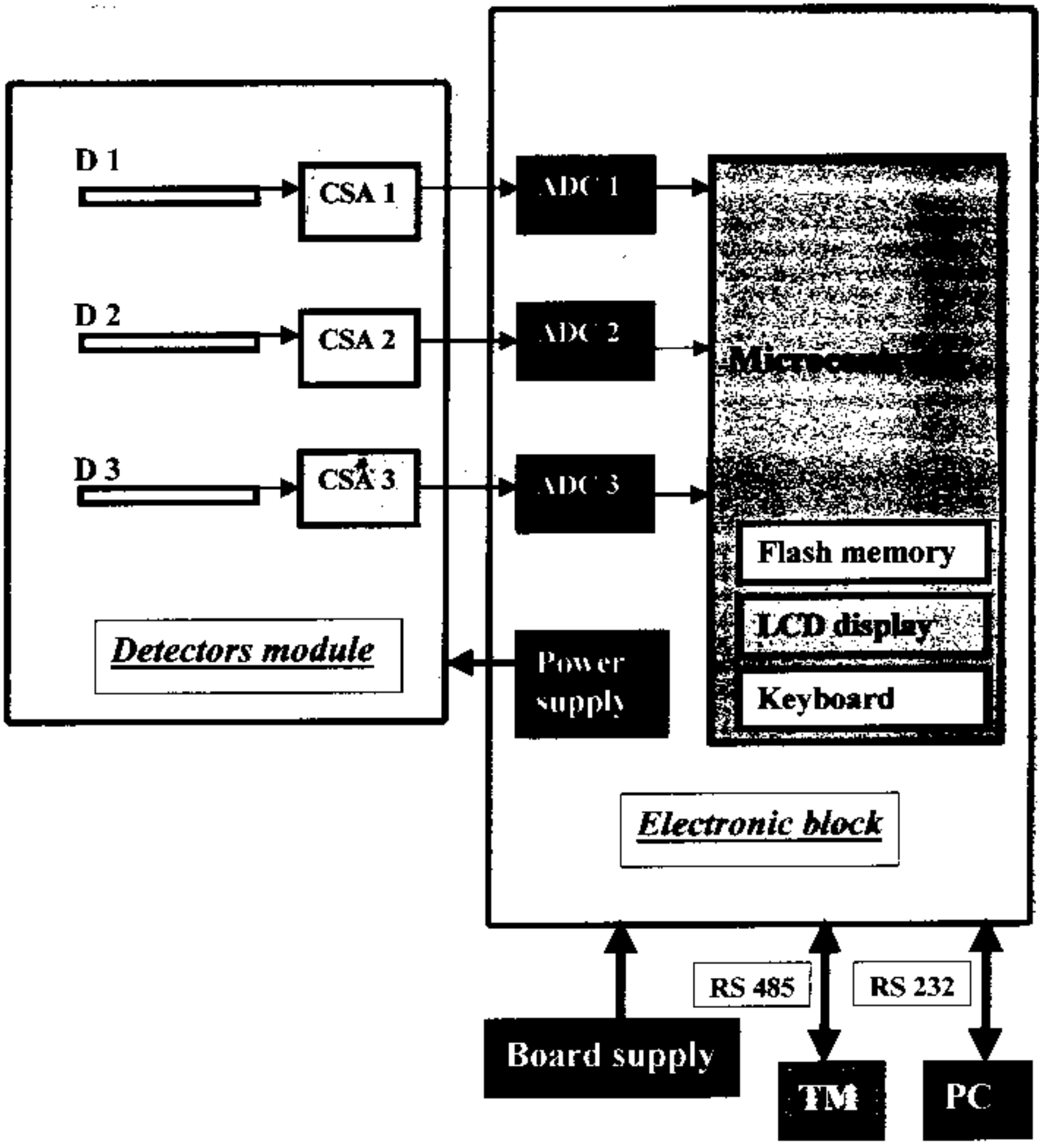

Block-diagram of LIULIN-5

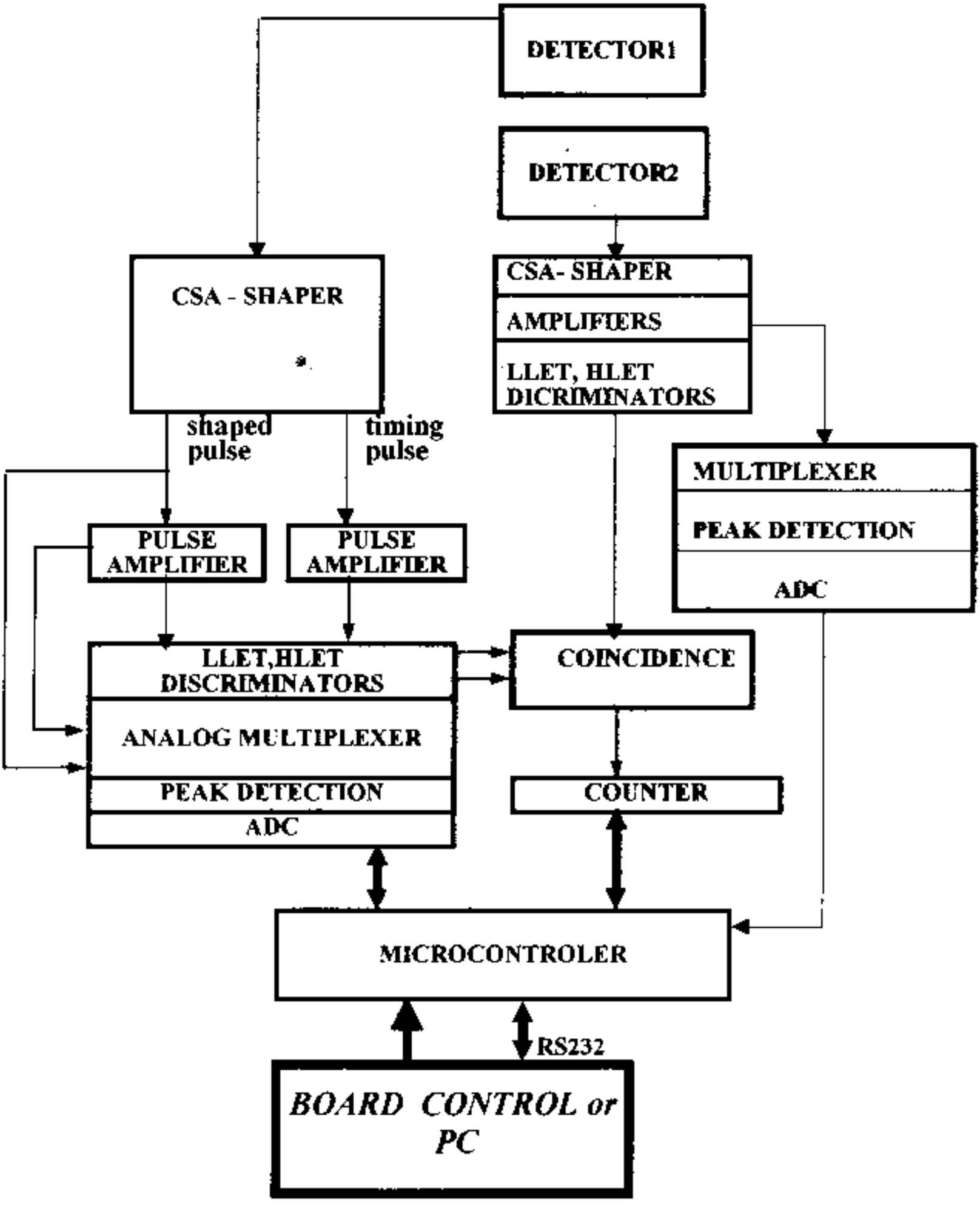

BLOCK- DIAGRAM OF SSDT

Schedule of Matroshka – R experiment on ISS

- Detailed investigation of radiation conditions on ISS trajectory and inside RM for definition the fixed positions of the phantoms – 1 year.
- Radiation monitoring on ISS trajectory and simultaneous exposition of the anthropomorphic phantom outside ISS and of the spherical phantom inside RM - 1 year.
- Radiation monitoring on ISS trajectory and inside inhabitable compartments of RM during the exposition of the anthropomorphic and spherical phantoms at fixed places inside RM – at least 1 year.
- Detailed investigations of radiation conditions outside and inside RM - at least a half year.

Conclusions

Developed is Liulin-5 active dosemeter for measurement of radiation exposure distribution in a human phantom.
Developed are two versions of the instrument.
Thick detectors for better angular dependence of the sensitivity will be used.
Calibrations and intercalibrations of the different instruments of Matroshka-R equipment are necessary.
Further developments will allow extending of the number of detector modules and their placement in orthogonal directions.