Radiation Measurements with Passive Radiation Dosimeters (PRDs) during STS-120

(23 Oct. - 7 Nov. 2007: Harmony Node2 Install)

Paolo A. Nespoli - ESA

D. Zhou[1,2], E. Semones[1]
R. Gaza[1,2], N. Zapp[1]

[1]NASA - Johnson Space Center,
2101 Nasa Parkway, Houston, TX 77058, USA

[2]Universities Space Research Association,
3600 Bay Area Blvd, Houston, TX 77058, USA

LET Spectrum Method for Radiation Measurement Using CR-39

(1) CR-39 Exposure and Chemical Etch

(a) Radiation Exposure of CR-39 Detectors

(b) Chemical Etch of CR-39 Detectors

(c) Bulk Etch Measurement

$$B = \frac{(m_1 - m_2)T_2}{2m_2}\left(1 - \frac{pT_2}{2A_d}\right)$$

(2) Data Scan and Acquisition

Events were identified and the major and minor axes of the etched track cones on the CR-39 surface were measured by manual scan.

(3) Data Analysis and LET Spectra Generating

Scanned data were then analyzed, the LET spectra were generated and the radiation quantities were obtained.

Tracks observed were due to:

(a) Short range recoils and fragments produced by nuclear interactions between incident particles and CR-39 nuclei – etched cones are on one surface of CR-39.

(b) Long range HZEs (high charge & high energy particles) – etched cones are on at least two surfaces of CR-39 (coincidence events: 600 microns) .

The etch rate ratio S is calculated by Somogyi formula:

$$S = \sqrt{1 + 4\left(\frac{a}{2B}\right)^2 / \left[1 - \left(\frac{b}{2B}\right)^2\right]^2}$$

where a and b are the major and minor axes respectively.

LET Calibration for CR-39 Detectors

The relationship between LET_{200} in CR-39 and etch rate ratio S was determined by calibrating the CR-39 detectors with heavy ions and protons

The LET_{200} CR-39 values of the particles are calculated either by codes or by Benton's table (Benton E. V., 1969) and the etch rate ratio S can be calculated from Somogyi formula

The relationship of LET_{∞} in water and LET_{200} in CR-39 can be expressed as [19]:

$$\log(LET_{\infty}\ \text{water}) = 0.1689 + 0.984 \log(LET_{200}\ \text{CR-39})$$

Figure 1 shows the LET calibration of CR-39 detectors obtained by the JSC-SRAG researchers.

CR-39 used was manufactured by American Technical Plastics.

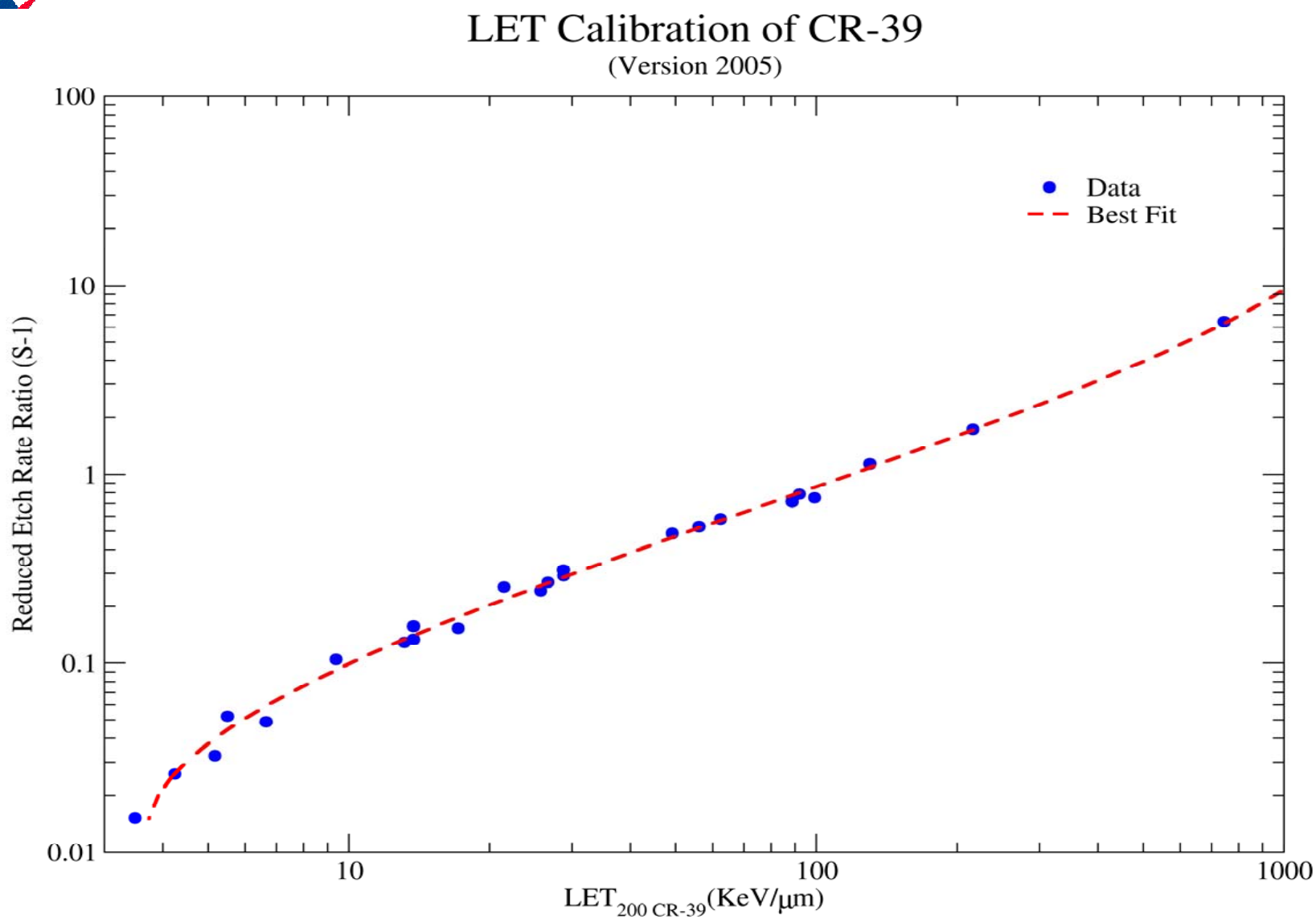

Figure 1: LET calibration of CR-39 detectors.

LET Spectrum Generation

Differential and Integral LET Spectrum

For isotropically distributed radiation field, the differential fluence

$$F = (2\pi A \cos^2 \delta_{cut})^{-1} \frac{dN}{dLET}$$

The differential absorbed dose (Gy) is then

$$4\pi \times 1.6 \times 10^{-9} \times LET_{\infty} \times F$$

The differential dose equivalent is obtained as Dose×Q, where Q is the quality factor recommended by ICRP-60

The integral spectrum is generated by summing the differential spectrum from high LET to low LET

The average quality factor is calculated by

Q (≥ LET) = integral dose equivalent (≥ LET) / integral dose (≥ LET)

TL and OSL Dosimeters

Table1: TL and OSL dosimeters used by JSC-SRAG

Dosimeter Type	Composition	Supplier	Readout Method
TLD-100	LiF:Mg,Ti	Harshaw (Thermo Fisher Scientific)	TL
TLD-300	CaF_2:Tm	(Same as above)	TL
OSLD-300	Al_2O_3:C	Landauer Inc.	OSL (for 300s)
OSLD-3	Al_2O_3:C	Landauer Inc.	OSL (for 3s)

PRD Locations

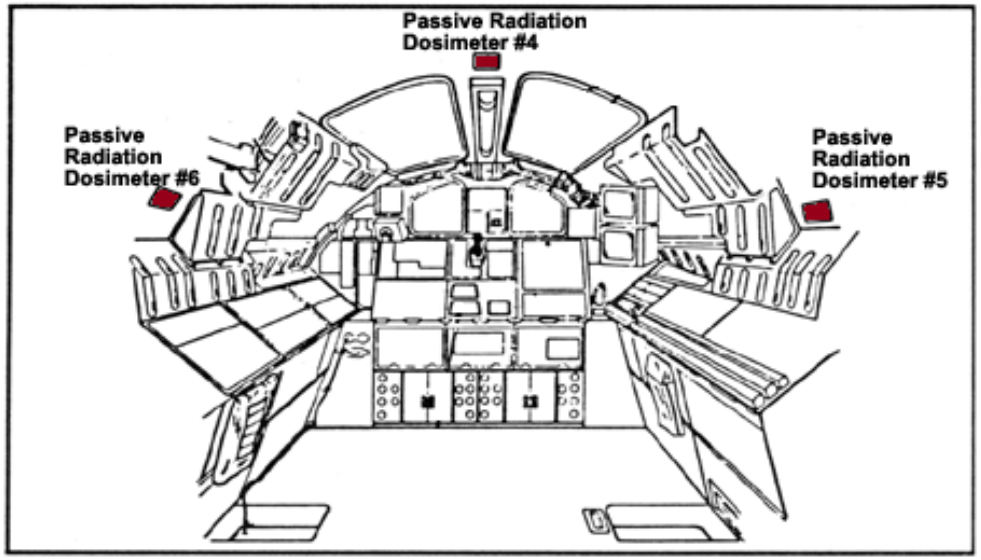

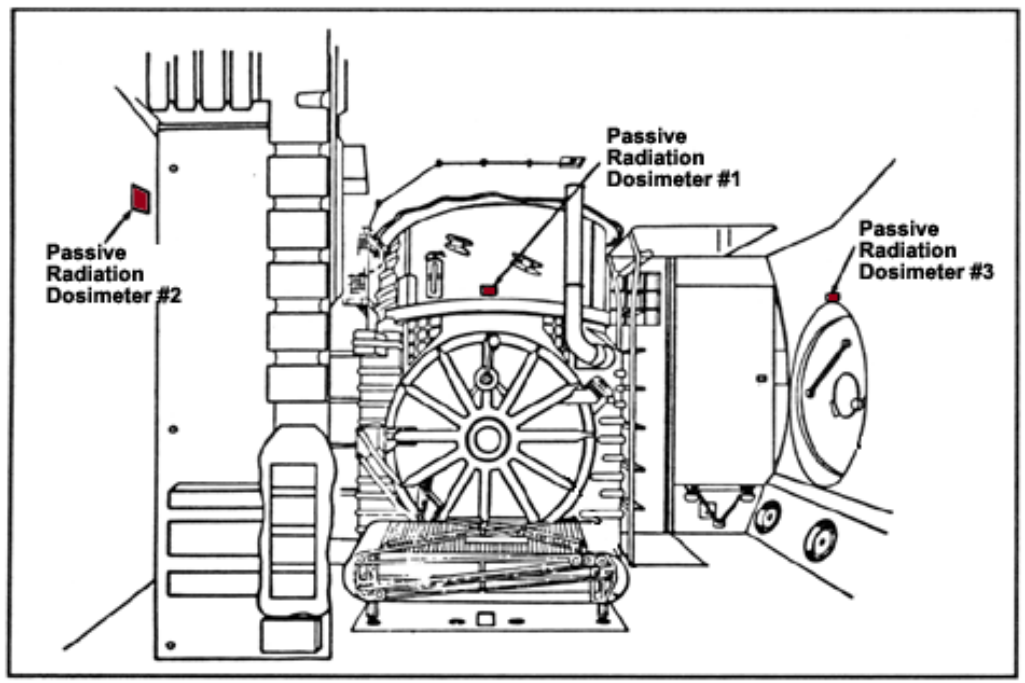

CR-39 Measurement Results

Figure 2 shows the LET spectra of differential fluence, Figure 3 shows the LET spectra of dose equivalent measured by PRD CR-39 detectors.

The top six curves are for total particles (primary and secondaries including HZEs) and the lower one is for HZE particles only measured at location 2.

There is an increase of particle fluence between LET ~ 100 to 200 keV/μm water contributed by GCR ions

Locations (PRD3 - PRD6) are between those for PRD1 and PRD2.

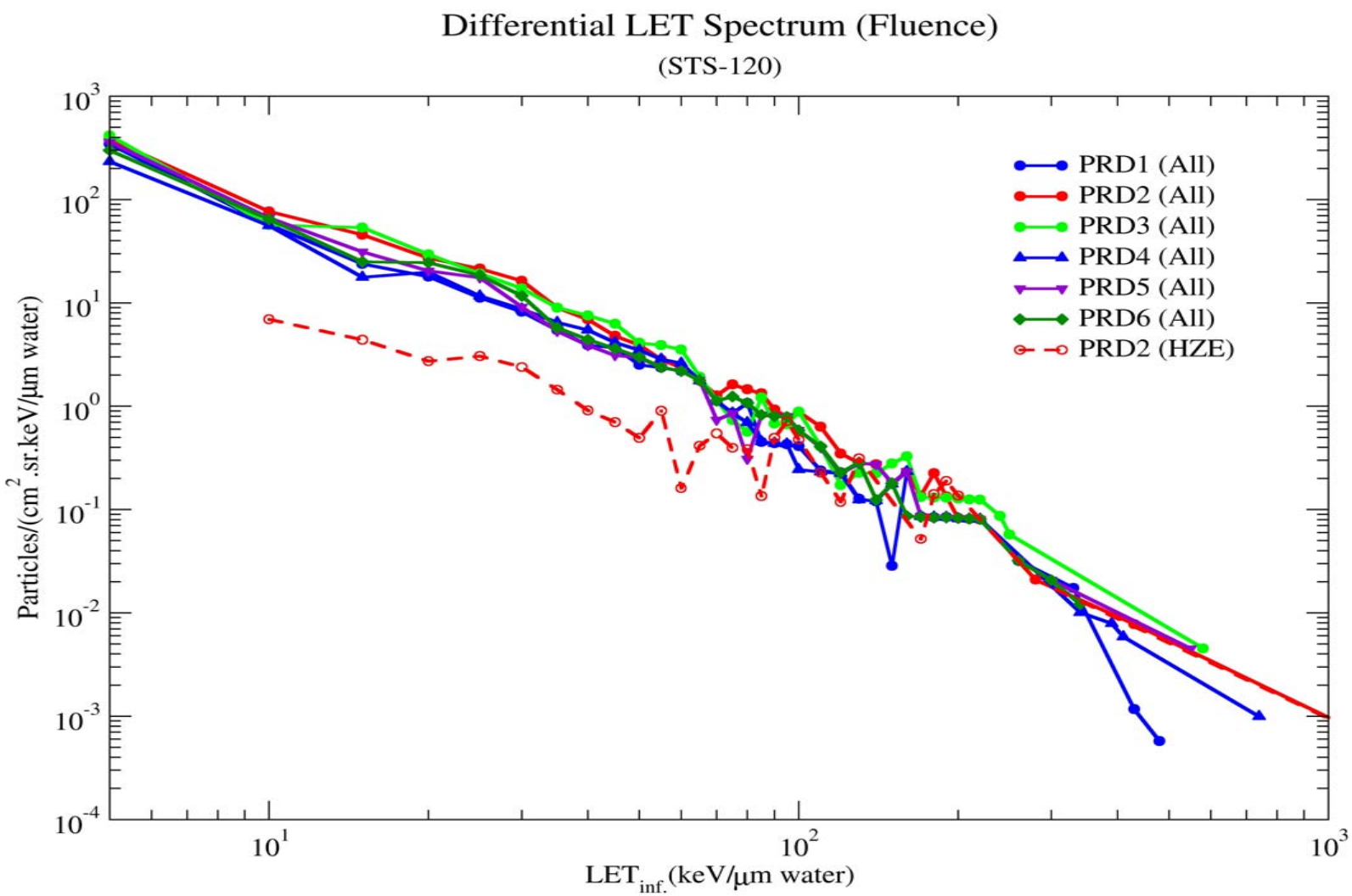

Figure 2: Differential LET spectrum of fluence.

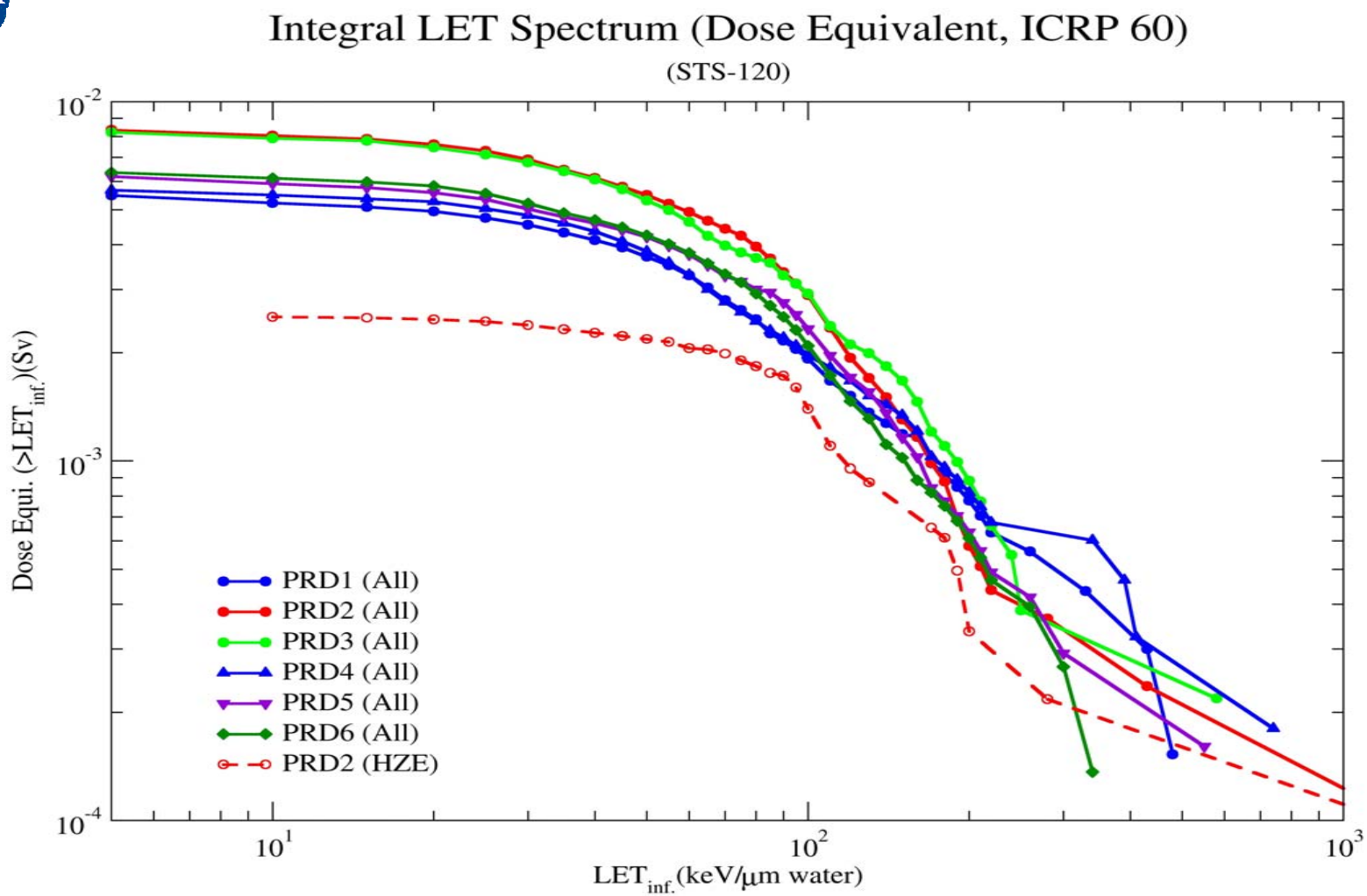

Figure 3: Integral LET spectrum of dose equivalent.

Figure 4 shows the average quality factors measured with CR-39. The top curve is for HZE particles and the lower four are for total particles.

Figure 4 shows that at 10 keV/μm water, the Q factor of HZEs is much higher than those for total Particles, therefore they can impact risk for astronauts

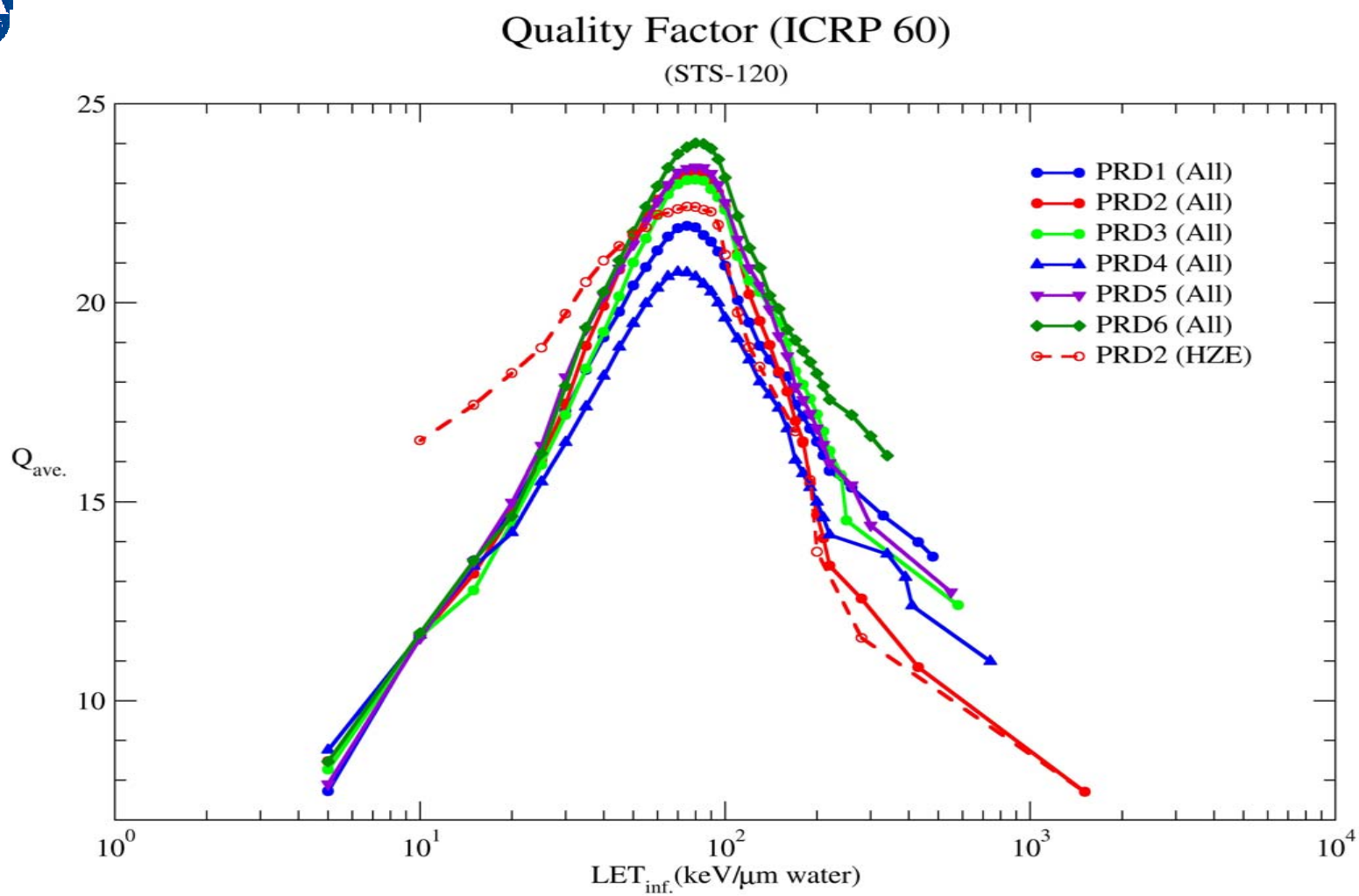

Figure 4: Integral LET spectra of quality factor.

Table 2: Radiation quantities measured with CR-39 PNTDs (ICRP 60, ≥ 10 keV/μm water)

Dosimeter	Particle Measured	Absorbed Dose	Dose Equivalent	Q Factor
		(mGy)	(mSv)	
PRD1	Total	0.45 ± 0.05	5.23 ± 0.55	11.63 ± 1.22
PRD2	Total	0.69 ± 0.05	8.06 ± 0.58	11.61 ± 0.84
	HZE	0.15 ± 0.02	2.52 ± 0.32	16.53 ± 2.13
PRD3	Total	0.68 ± 0.06	7.91 ± 0.70	11.62 ± 1.03
PRD4	Total	0.47 ± 0.05	5.50 ± 0.54	11.65 ± 1.15
PRD5	Total	0.51 ± 0.05	5.92 ± 0.58	11.58 ± 1.14
PRD6	Total	0.52 ± 0.05	6.13 ± 0.57	11.70 ± 1.10

Combination of Results Measured with TLDs/OSLDs and CR-39 PNTDs

Research indicates that the detection efficiency of TLDs/OSLDs is ~ 100% for LET ≤ 10 keV/μm water and the detection efficiency of CR-39 detectors is 100% for LET ≥ 10 keV/μm water .

The total dose and dose equivalent for all LET can be obtained by combining the results measured by TLD/OSLD (≤ 10 keV/μm water) and CR-39 (≥ 10 keV/μm water) and the best combination point is at LET = 10 keV/μm water.

Table 3 is a collection of the combined results for the PRDs of STS-120.

The combined data indicate:

1) ~ 85% of total dose is contributed by the low LET radiation;
2) ~ 2/3 of total dose equivalent is contributed by the high LET radiation.

Due to this reason and that the biological impact to humans is dominated by high LET radiation, measurement of high LET radiation is important and should be emphasized and conducted systematically.

Table 3: Results combined from those measured with CR-39 and TLDs/OSLDs

(ICRP 60, combined at 10 keV/μm water)

Dosimeter Location	TLD/OSLD Type	Dose TLD/OSLD Low LET Q=1 (mGy)	Dose CR-39 High LET Q>10 (mGy)	Total Dose All LET (mGy)	Total Dose Equivalent All LET (ICRP 60) (mSv)	Q All LET
PRD 1	TLD-100	2.71 ± 0.03	0.45 ± 0.05	3.16 ± 0.06	7.93 ± 0.55	2.51
	TLD-300	2.63 ± 0.11		3.08 ± 0.12	7.86 ± 0.56	2.55
	OSLD-300	2.62 ± 0.04		3.07 ± 0.06	7.84 ± 0.56	2.56
	OSLD-3	2.77 ± 0.05		3.22 ± 0.07	7.99 ± 0.56	2.49
PRD 2	TLD-100	4.32 ± 0.06	0.69 ± 0.05	5.02 ± 0.08	12.38±0.58	2.47
	TLD-300	4.16 ± 0.14		4.86 ± 0.15	12.22±0.60	2.52
	OSLD-300	3.96 ± 0.07		4.65 ± 0.09	12.01±0.58	2.58
	OSLD-3	4.27 ± 0.10		4.96 ± 0.11	12.32±0.59	2.48

(To be continued)

(Table 3 - Continued)

Dosimeter Location	TLD/OSLD Type	Dose TLD/OSLD Low LET Q=1 (mGy)	Dose CR-39 High LET Q>10 (mGy)	Total Dose All LET (mGy)	Total Dose Equivalent All LET (ICRP 60) (mSv)	Q All LET
PRD3	TLD-100	4.06 ± 0.06	0.68 ± 0.06	4.74 ± 0.08	11.97 ± 0.70	2.53
	TLD-300	3.77 ± 0.11		4.45 ± 0.13	11.69 ± 0.71	2.62
	OSLD-300s	3.82 ± 0.06		4.50 ± 0.08	11.73 ± 0.70	2.61
	OSLD-3s	4.17 ± 0.08		4.85 ± 0.10	12.08 ± 0.70	2.49
PRD4	TLD-100	2.72 ± 0.06	0.47 ± 0.05	3.20 ± 0.08	8.23 ± 0.54	2.57
	TLD-300	2.58 ± 0.06		3.05 ± 0.08	8.08 ± 0.54	2.65
	OSLD-300s	2.64 ± 0.04		3.11 ± 0.06	8.14 ± 0.54	2.62
	OSLD-3s	2.81 ± 0.06		3.29 ± 0.08	8.32 ± 0.54	2.53
PRD5	TLD-100	3.02 ± 0.04	0.51 ± 0.05	3.54 ± 0.06	8.94 ± 0.58	2.53
	TLD-300	3.04 ± 0.08		3.55 ± 0.09	8.96 ± 0.59	2.52
	OSLD-300s	2.97 ± 0.06		3.48 ± 0.08	8.89 ± 0.58	2.56
	OSLD-3s	3.17 ± 0.09		3.69 ± 0.10	9.09 ± 0.59	2.47
PRD6	TLD-100	3.09 ± 0.07	0.52 ± 0.05	3.61± 0.09	9.21± 0.57	2.55
	TLD-300	3.07 ± 0.08		3.59 ± 0.09	9.20 ± 0.58	2.56
	OSLD-300s	3.00 ± 0.06		3.52 ± 0.08	9.13 ± 0.57	2.59
	OSLD-3s	3.16 ± 0.08		3.68 ± 0.09	9.28 ± 0.58	2.52