Ref.: SDT-EK-SCI-HO-0900_01_00
Template: UKL2022-EK-PQA-HO-0003_00_01

Space Dosimetry Telescope concept for the MSR Earth Return Orbiter

A. Hirn[1], B. Erdős[1], B. Zábori[1], G. Gutay[2], J. Szőke[3]
[1] Centre for Energy Research, Budapest, Hungary (hirn.attila@ek-cer.hu)
[2]REMRED Ltd., Budapest, Hungary
[3]Admatis Ltd., Miskolc, Hungary

Ref.: SDT-EK-SCI-HO-0900_01_00
Template: UKL2022-EK-PQA-HO-0003_00_01

Mars Sample Return

- MSR: NASA & ESA
  - Mars 2020 / Perseverance
  - Sample Return Lander / Sample ~~Fetch Rover~~, Mars Ascent Vehicle
  - Earth Return Orbiter

2 backup helicopters (~Ingenuity)

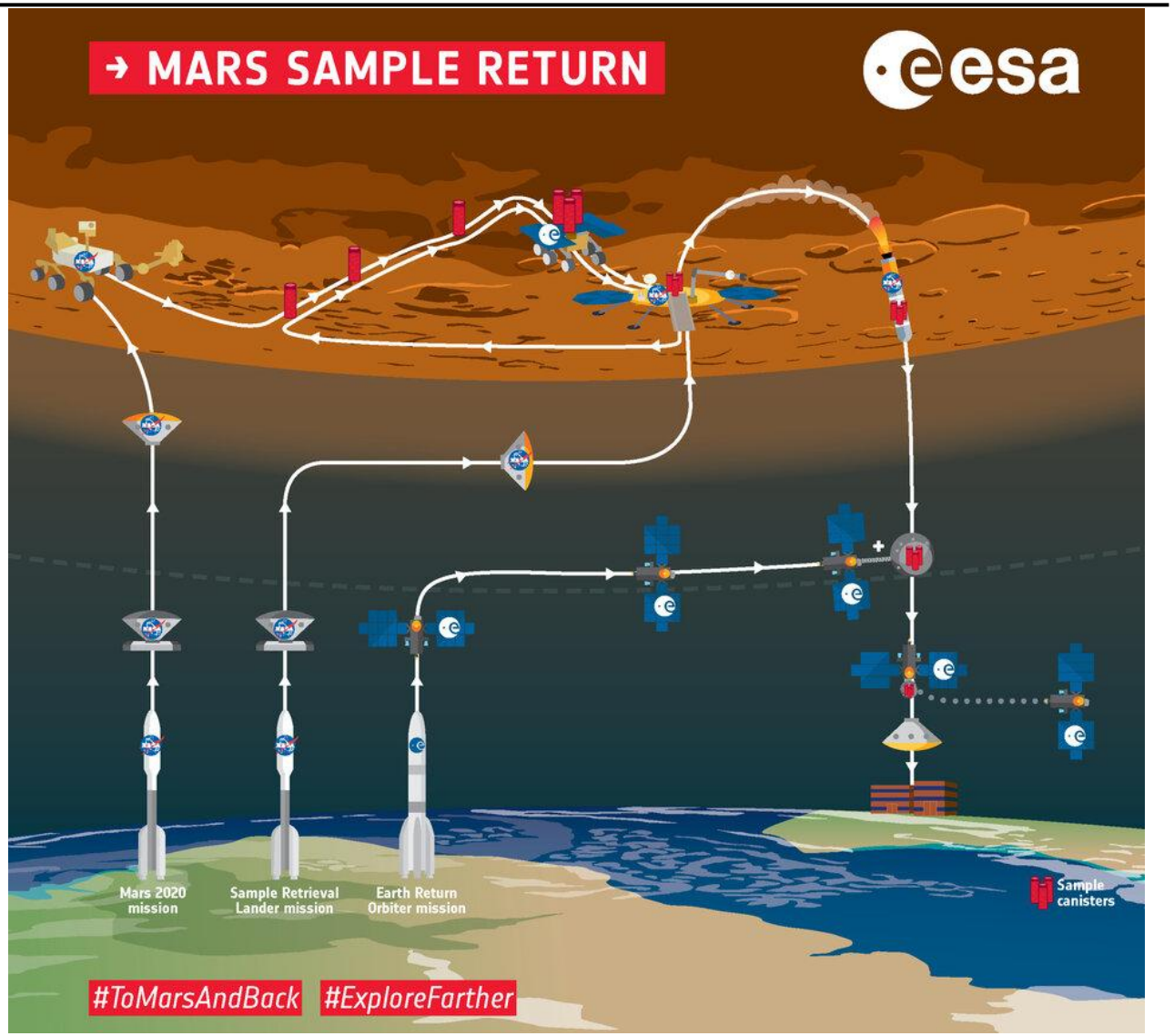

Ref.: SDT-EK-SCI-HO-0900_01_00
Template: UKL2022-EK-PQA-HO-0003_00_01

Earth

Return

Orbiter

- MSR 3rd phase
- ESA
- Airbus DS
- 144 m^2 solar panels

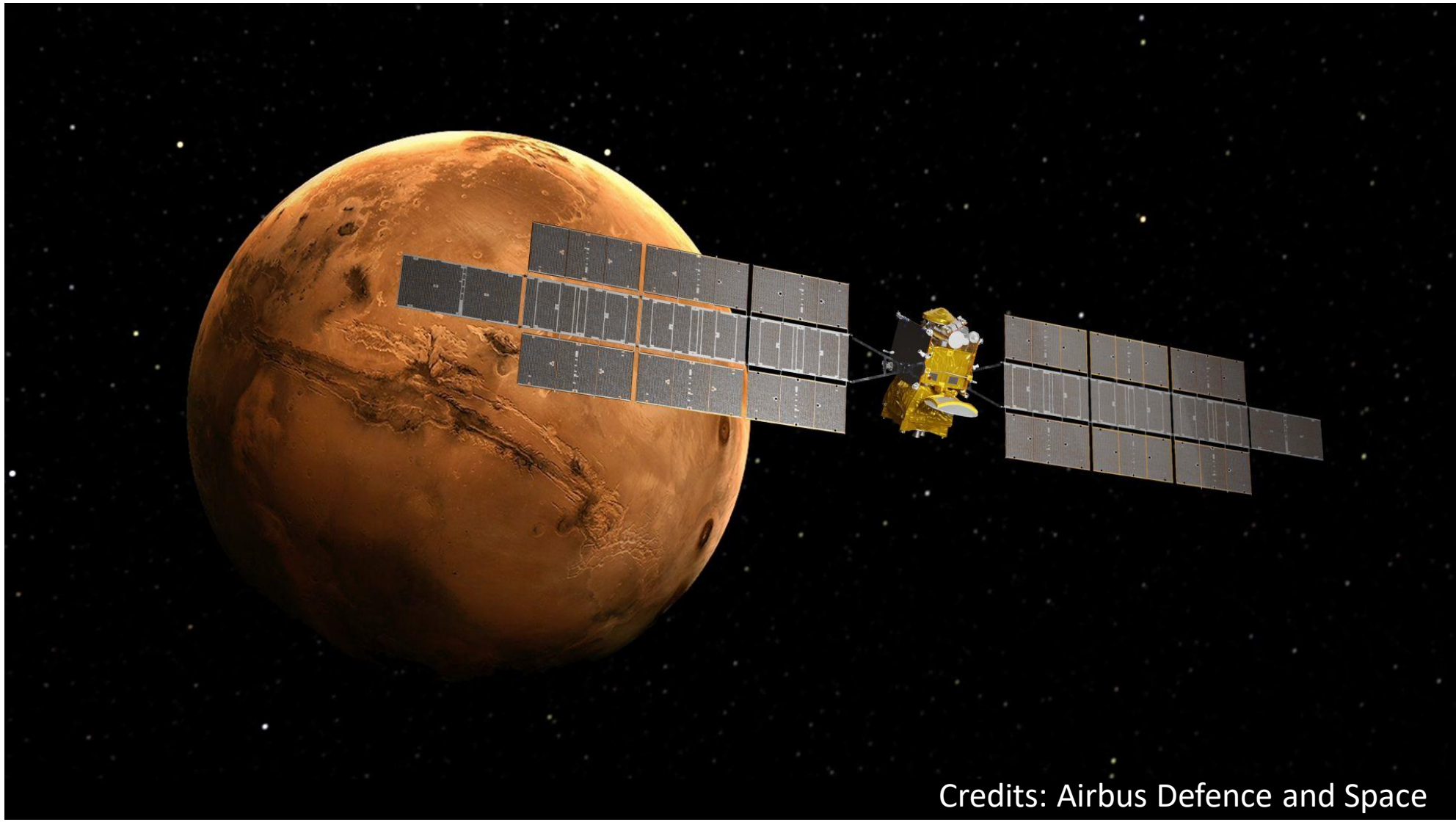

Ref.: SDT-EK-SCI-HO-0900_01_00
Template: UKL2022-EK-PQA-HO-0003_00_01

Space Dosimetry Telescope system for ERO (science P/L)

- Consortium lead by: **EK**
- **M**ars **S**ample **R**eturn Mission
- **E**arth **R**eturn **O**rbiter
- Provision of Space Dosimetry and Space Weather Data Products
- First return trip
- Launch: 2027
- Arrival back: 2033

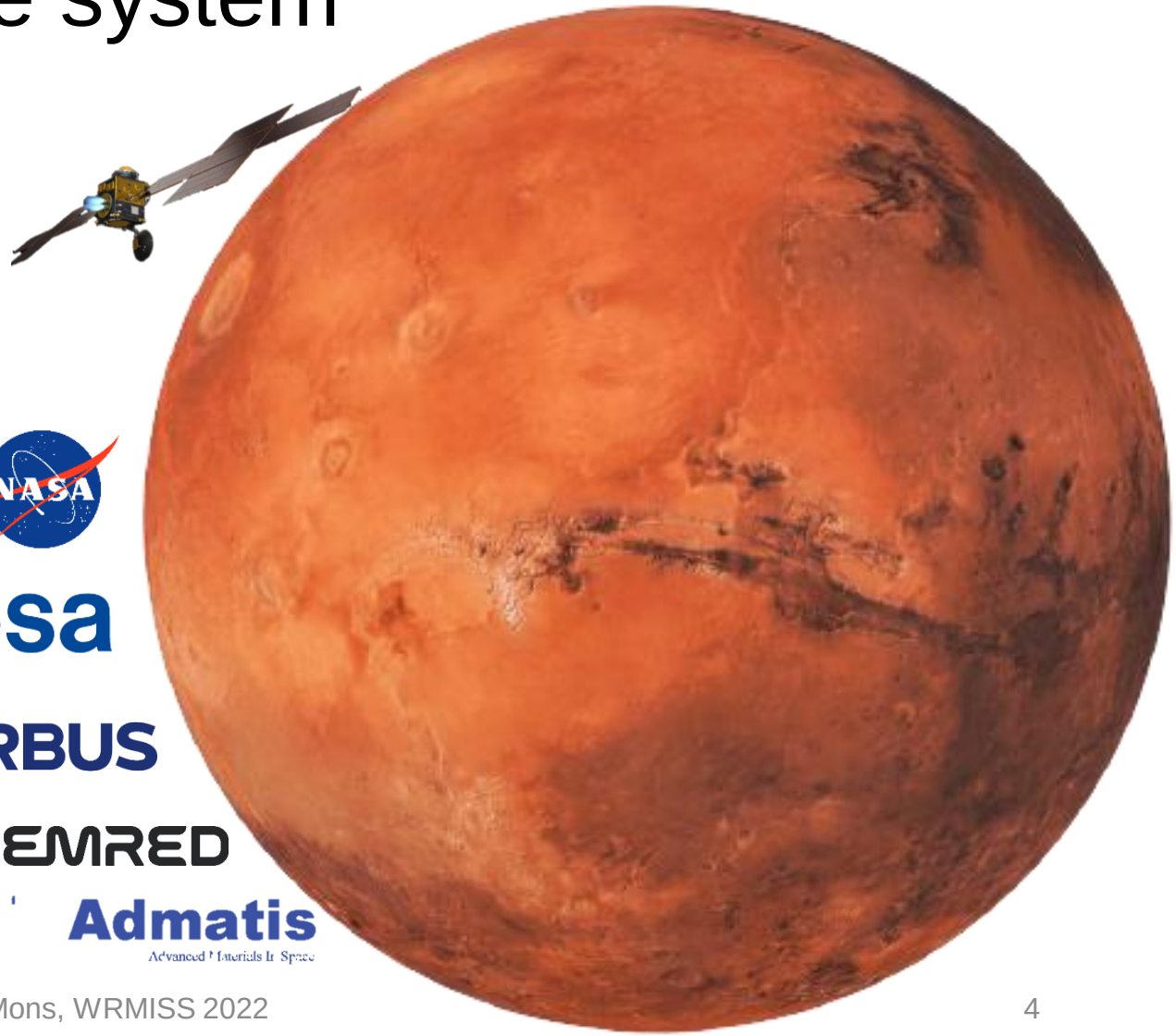

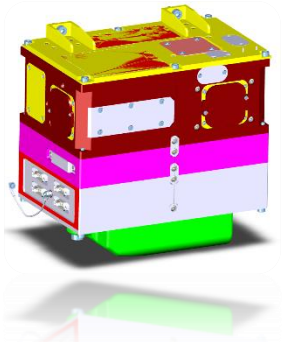

Ref.: SDT-EK-SCI-HO-0900_01_00
Template: UKL2022-EK-PQA-HO-0003_00_01

Objectives for the Space Dosimetry System

ID	Type	Description
SDT-PO-1	Primary	To provide measurements of dosimetric quantities for the Earth-Mars cruise, the Mars orbit and Mars-Earth return mission segments of the MSR-ERO mission behind different typical shielding thicknesses expected for astronauts to support radiation health risk assessment and mitigation of the crew of future human space missions.
SDT-PO-2	Primary	To provide measurements of the energy distribution and flux dynamics of space radiation field for the Earth-Mars cruise, the Mars orbit and Mars-Earth return mission segments of the MSR-ERO mission to support radiation environment modeling of future human space missions.
SDT-SO-3	Secondary	To characterize the effects of solar radiation storms reaching the MSR-ERO spacecraft during mission operations and changes in space weather conditions on the energy distribution and flux dynamics of energetic charged particles population and related dosimetric quantities.
SDT-SO-4	Secondary	To provide science data comparisons between different mission segments of MSR-ERO.

Ref.: SDT-EK-SCI-HO-0900_01_00
Template: UKL2022-EK-PQA-HO-0003_00_01

Combination of TRITEL and RADTEL

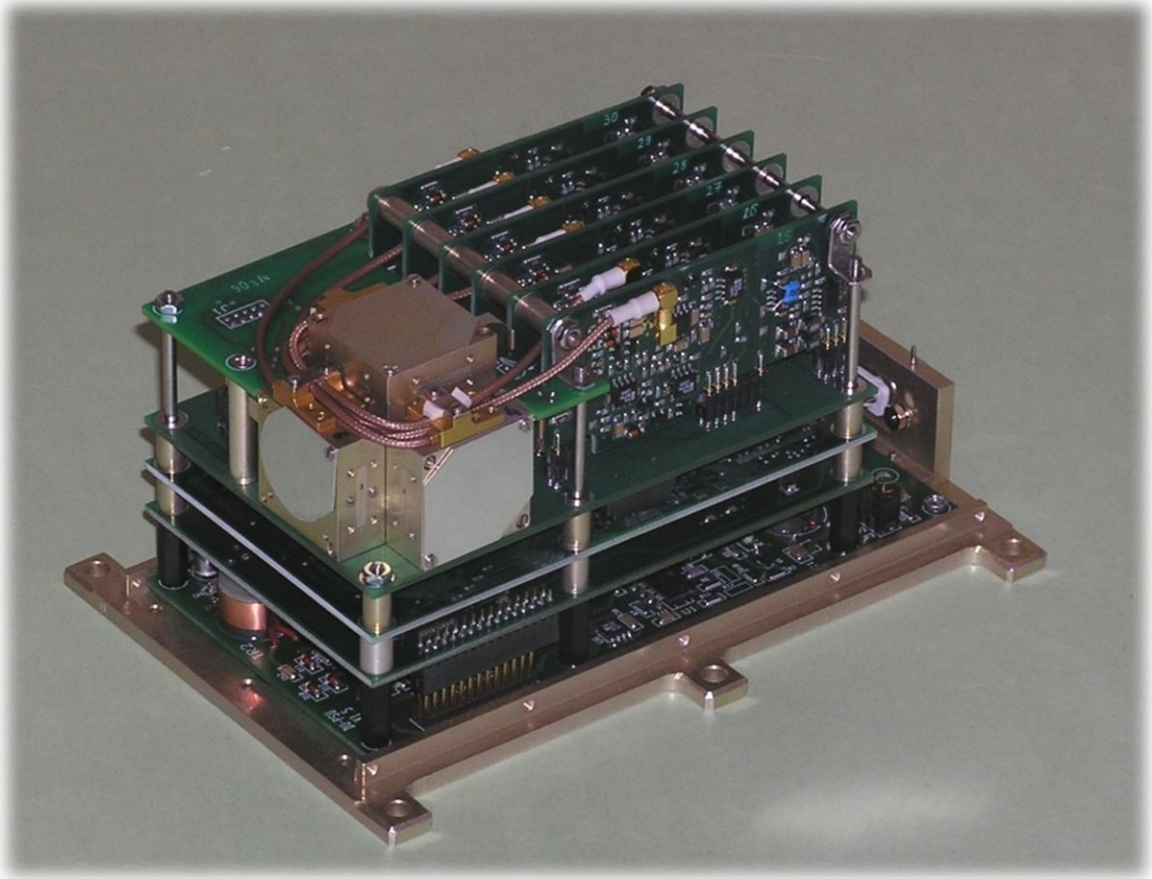

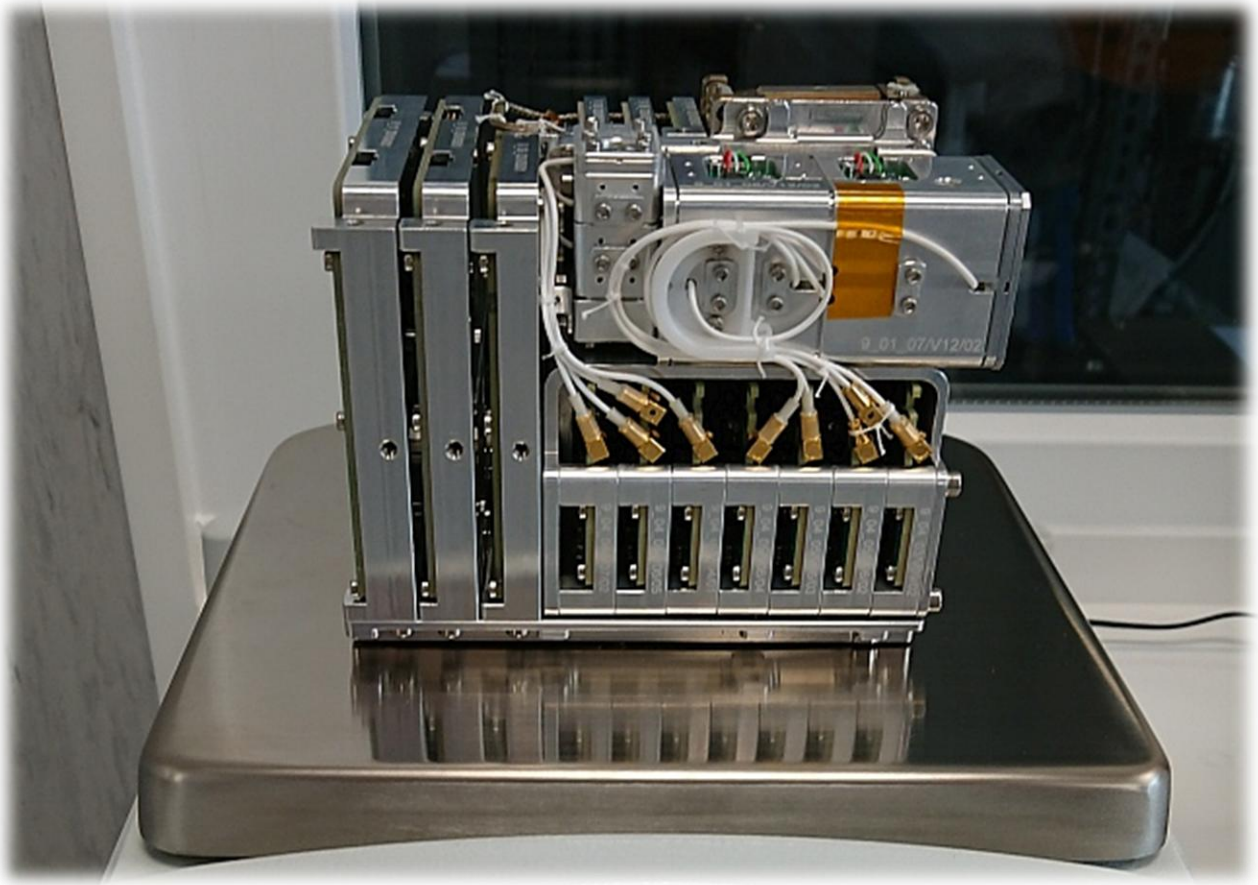

Ref.: SDT-EK-SCI-HO-0900_01_00
Template: UKL2022-EK-PQA-HO-0003_00_01

TRITEL 3D silicon detector telescope

- The TRITEL telescope assembly would be implemented in different shielding configuration for each of the orthogonal directions as follows
  - Axis 1: 2x5 µm thick Ti-foil shielding as minimum possible shielding to measure the primary radiation environment;
  - Axis 2: 1.2 mm Al shielding, which is the Al-equivalent shielding of the astronaut space suit, this value corresponds to the minimum physical shielding in worst case for any human Mars mission;
  - Axis 3: 13.1mm Al shielding, which is the as-built ISS structure cumulative shielding depth distribution function median Al-equivalent value
- LET_{water}: 0.2 – 120 keV/µm
- Absorbed dose (rate), dose eq. (rate), Q

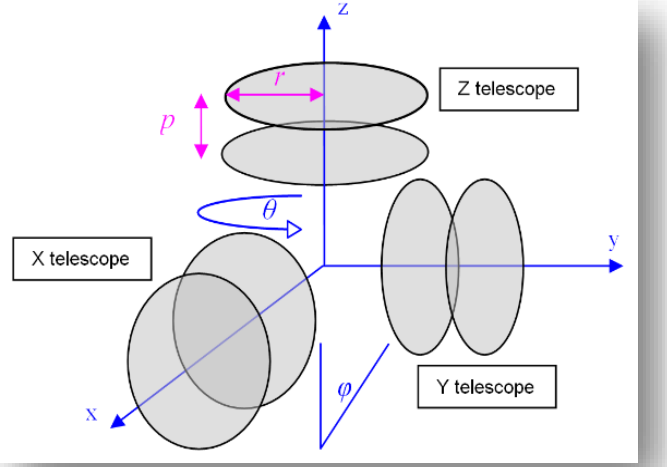

Ref.: SDT-EK-SCI-HO-0900_01_00
Template: UKL2022-EK-PQA-HO-0003_00_01

RADTEL

- Protons
  3-500 MeV
- Electrons
  300 keV – 4 MeV
- Heavy ion groups
  1.5-500 MeV/n

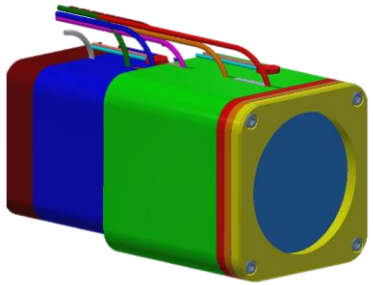

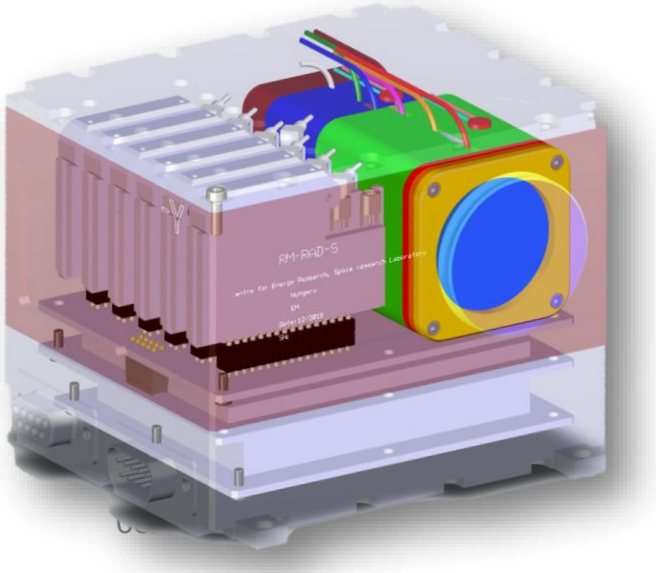

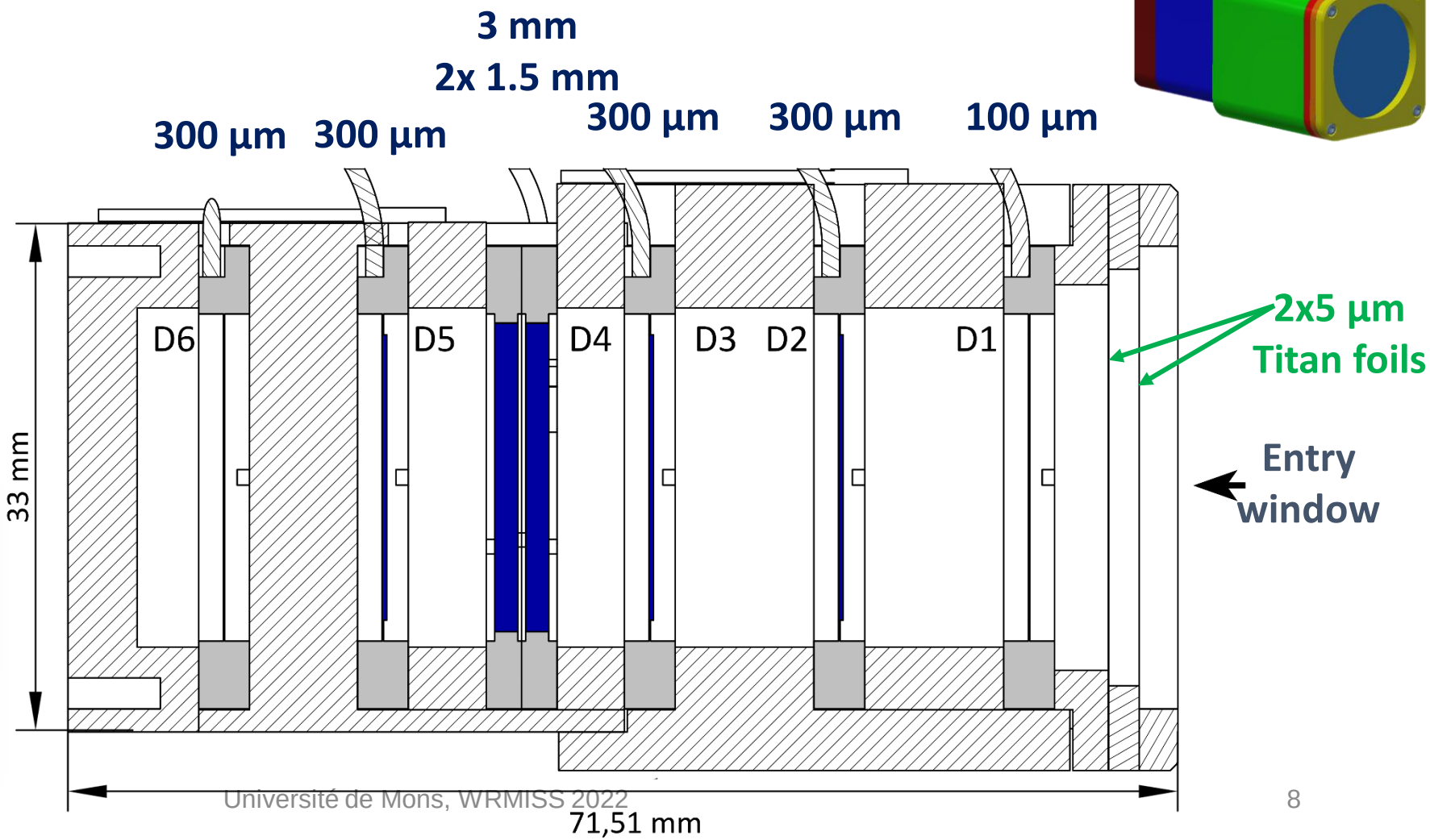

Ref.: SDT-EK-SCI-HO-0900_01_00
Template: UKL2022-EK-PQA-HO-0003_00_01

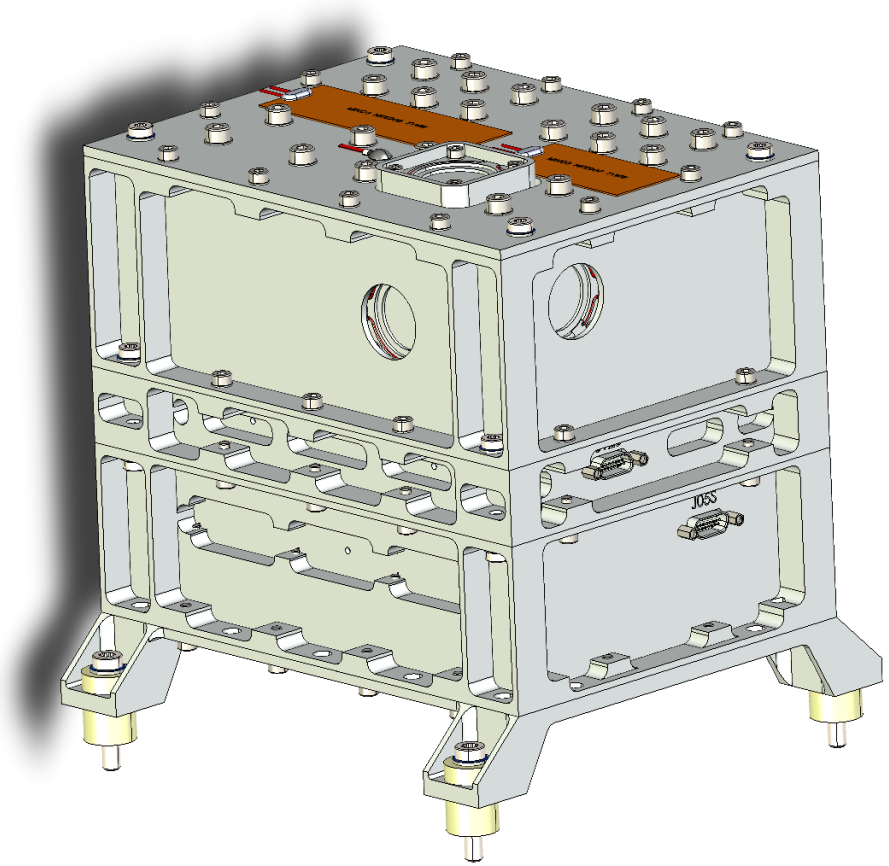

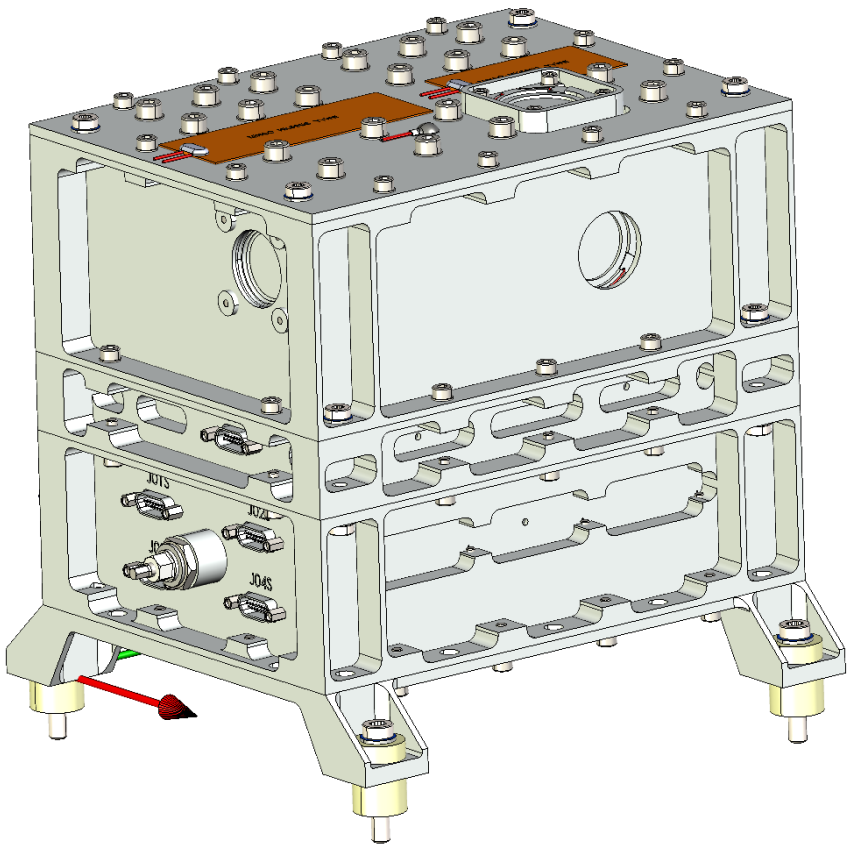

Ref.: SDT-EK-SCI-HO-0900_01_00
Template: UKL2022-EK-PQA-HO-0003_00_01

Payload Internal Design

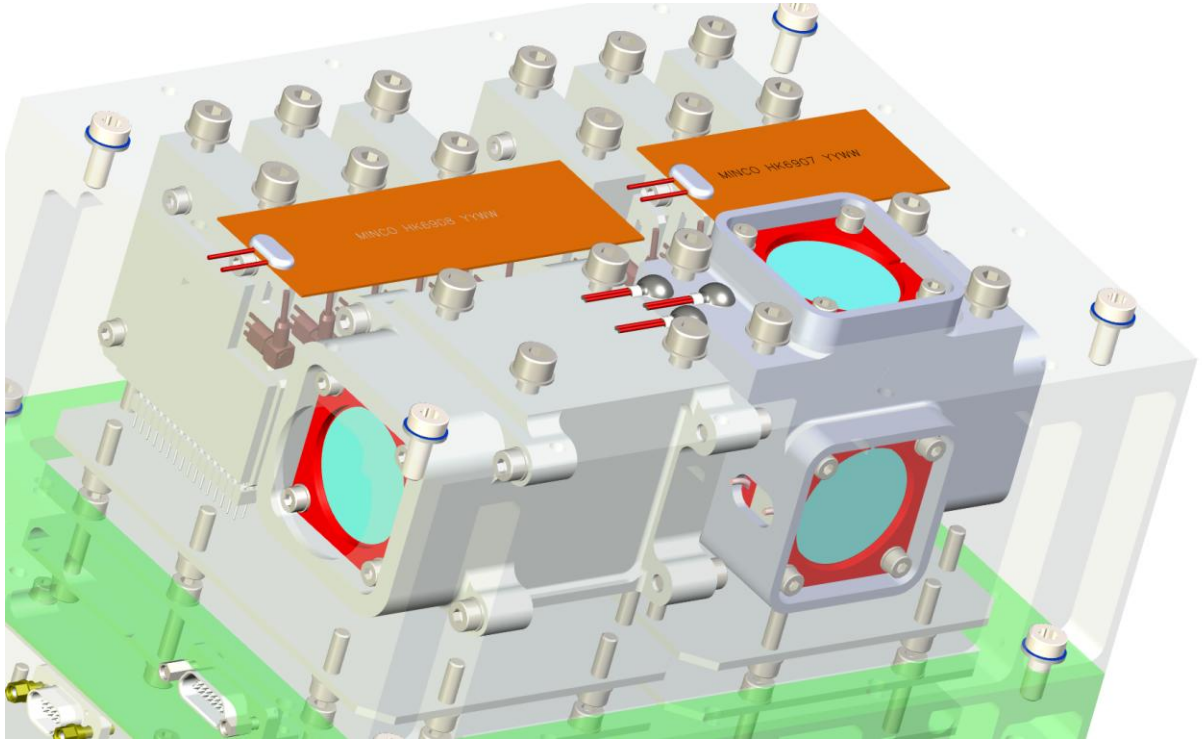

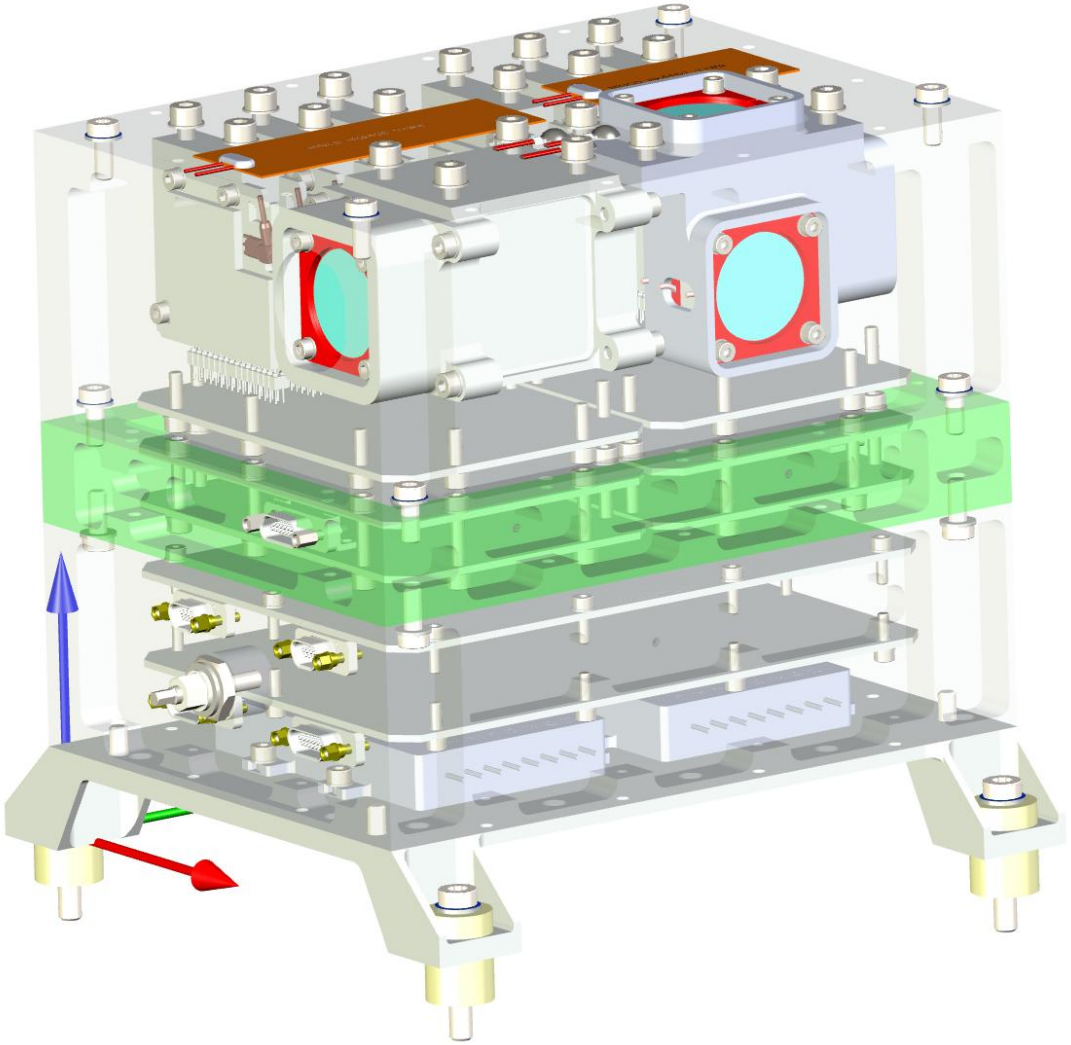

Ref.: SDT-EK-SCI-HO-0900_01_00
Template: UKL2022-EK-PQA-HO-0003_00_01

Payload Accommodation

- Mass: 2.45 kg
- 176.5 x 168 x 126 [mm^3]

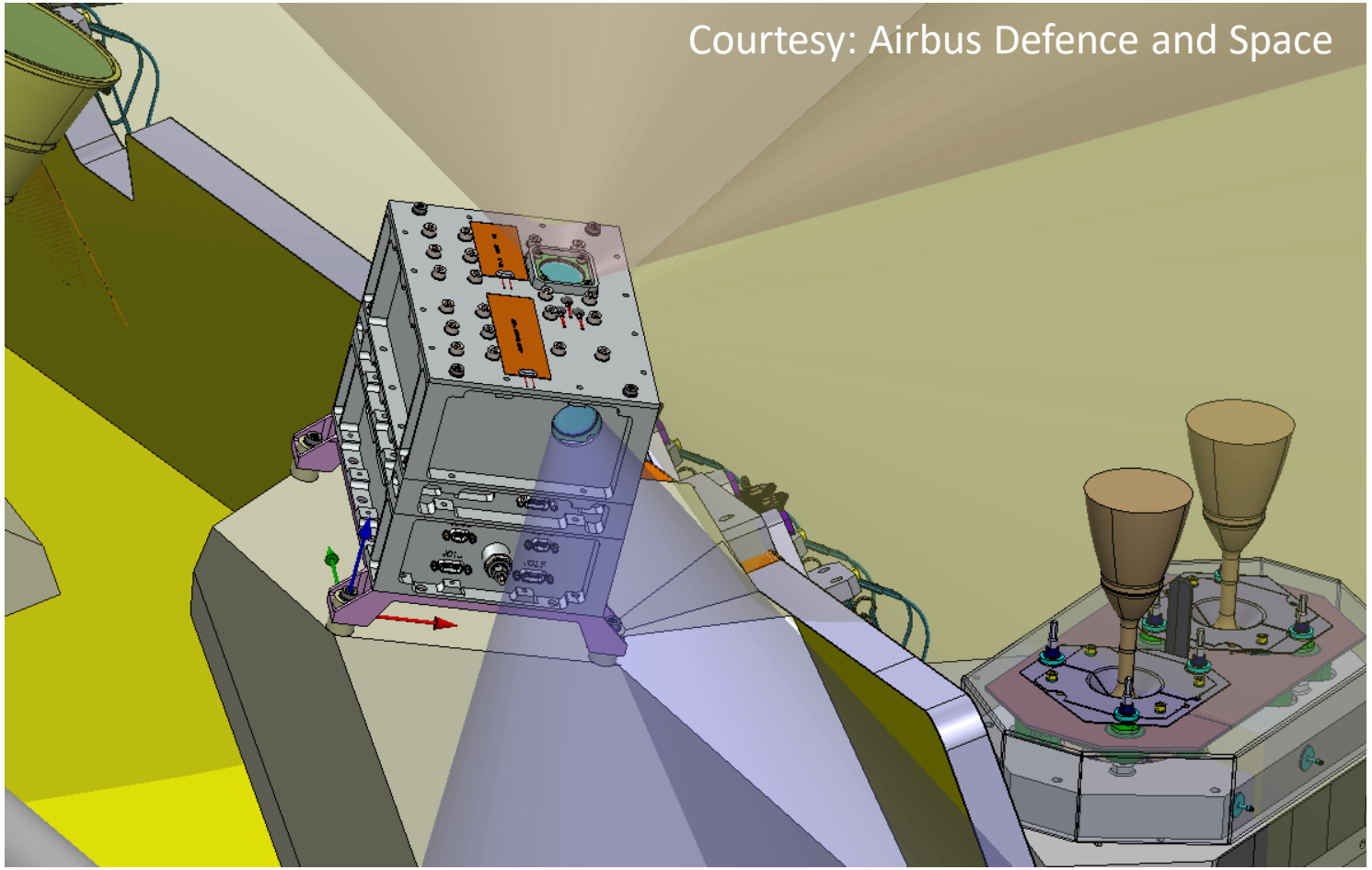

Ref.: SDT-EK-SCI-HO-0900_01_00
Template: UKL2022-EK-PQA-HO-0003_00_01

Payload Accommodation

RADTEL & TRITEL-Y FoV

TRITEL-Z FoV

TRITEL-X FoV

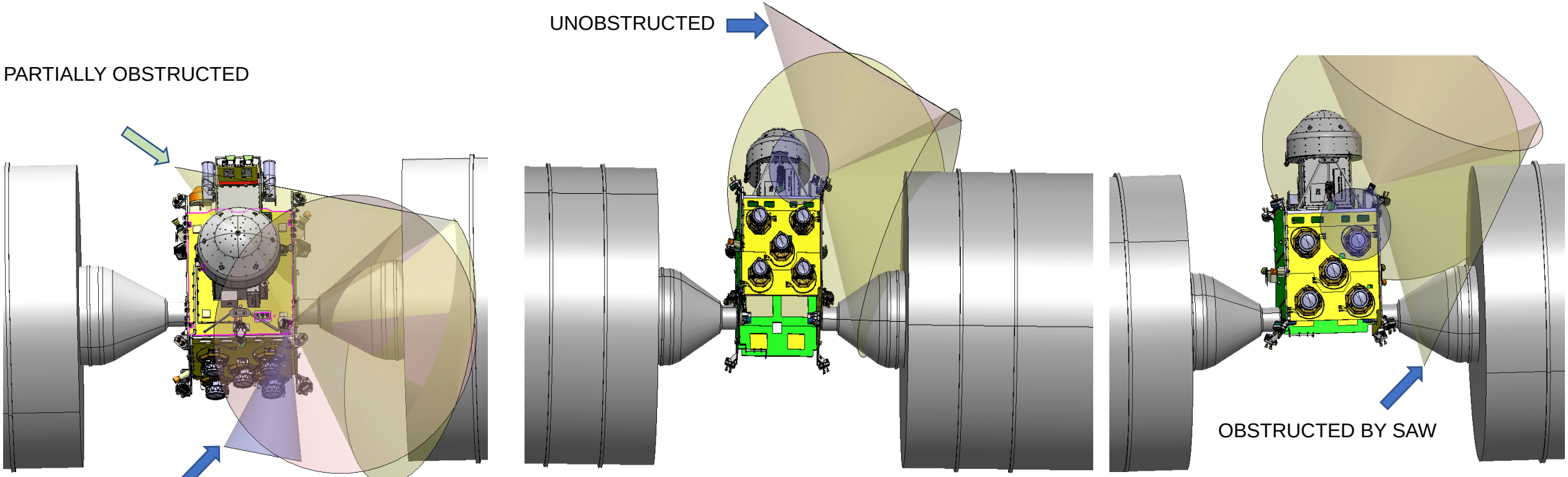

Courtesy: Airbus Defence and Space

Ref.: SDT-EK-SCI-HO-0900_01_00
Template: UKL2022-EK-PQA-HO-0003_00_01

Detector responses for protons (RADTEL)

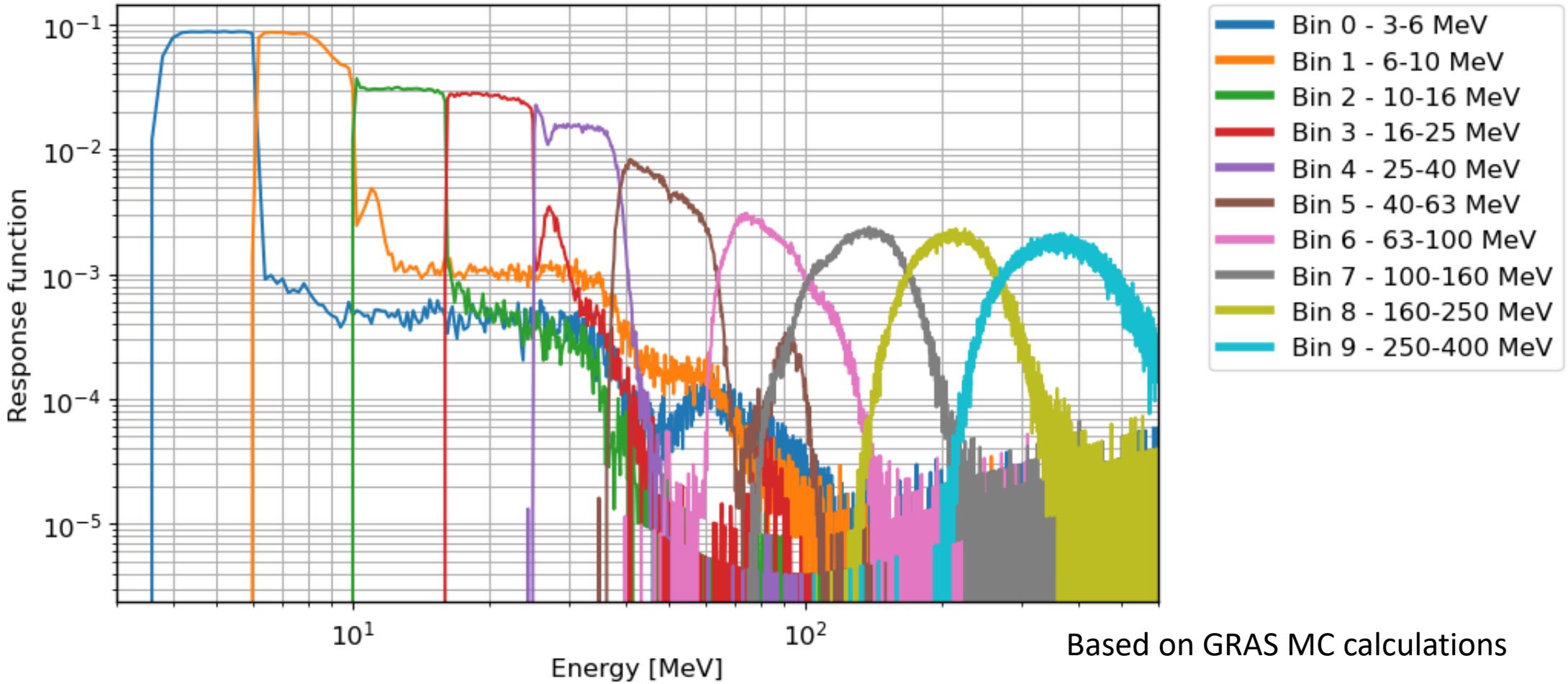

Based on GRAS MC calculations

Ref.: SDT-EK-SCI-HO-0900_01_00
Template: UKL2022-EK-PQA-HO-0003_00_01

Detector responses for electrons (RADTEL)

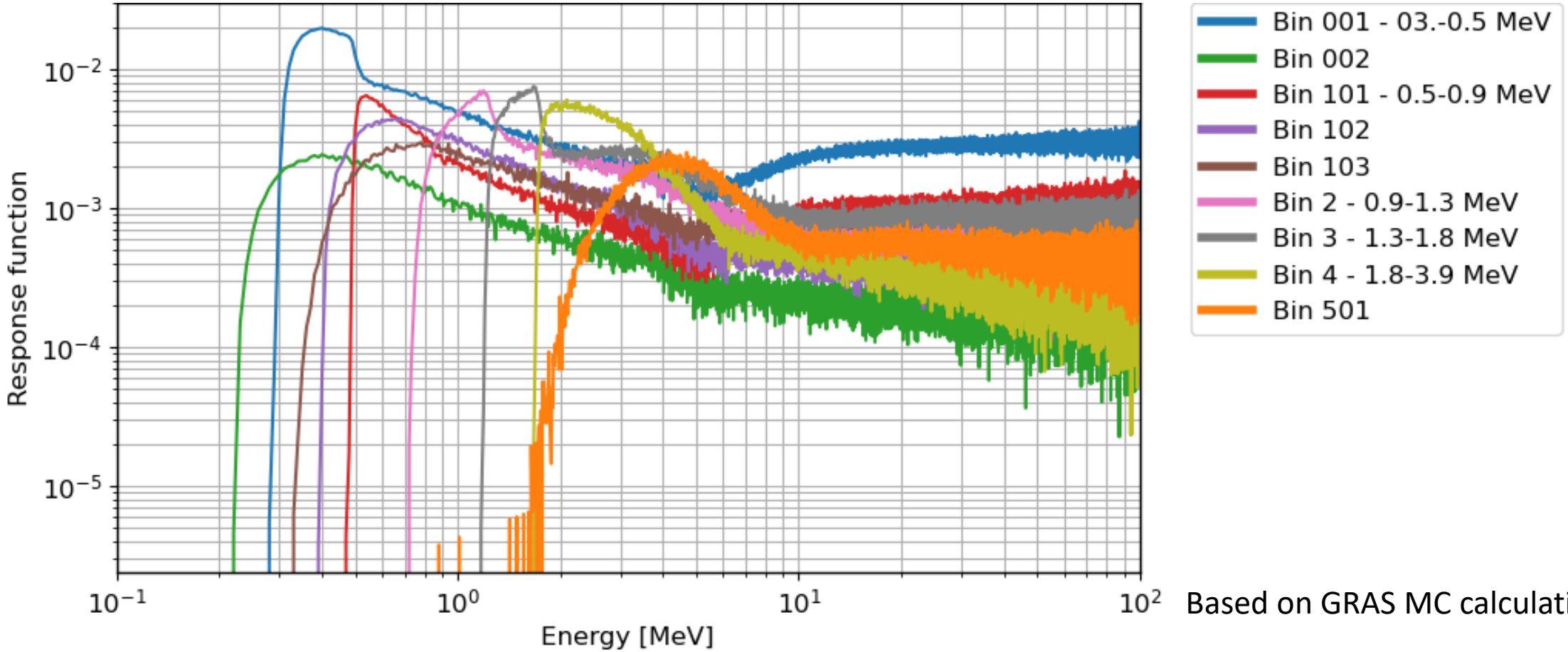

Based on GRAS MC calculations

Ref.: SDT-EK-SCI-HO-0900_01_00
Template: UKL2022-EK-PQA-HO-0003_00_01

Performance tests

- Proton – PIF – Proton Irradiation Facility at PSI
  - Energies after degrader: 230 MeV to 6 MeV in air
  - Energies set to mean energies of the logic
  - Set ups: 0°, 180°, 20°
- Electron – EMON – Electron monochromator at PSI
  - Simple bending magnet and strong electron source in large vacuum chamber

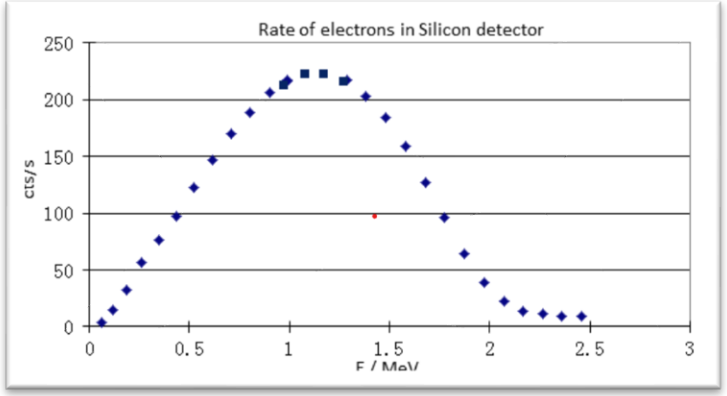

Source: Wojtek Hajdas, LTP Monday Seminar 2018

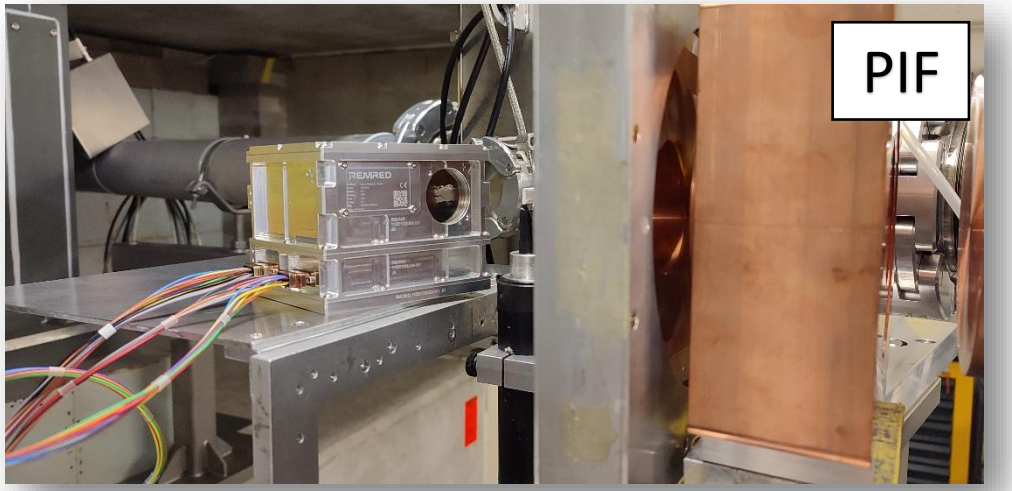

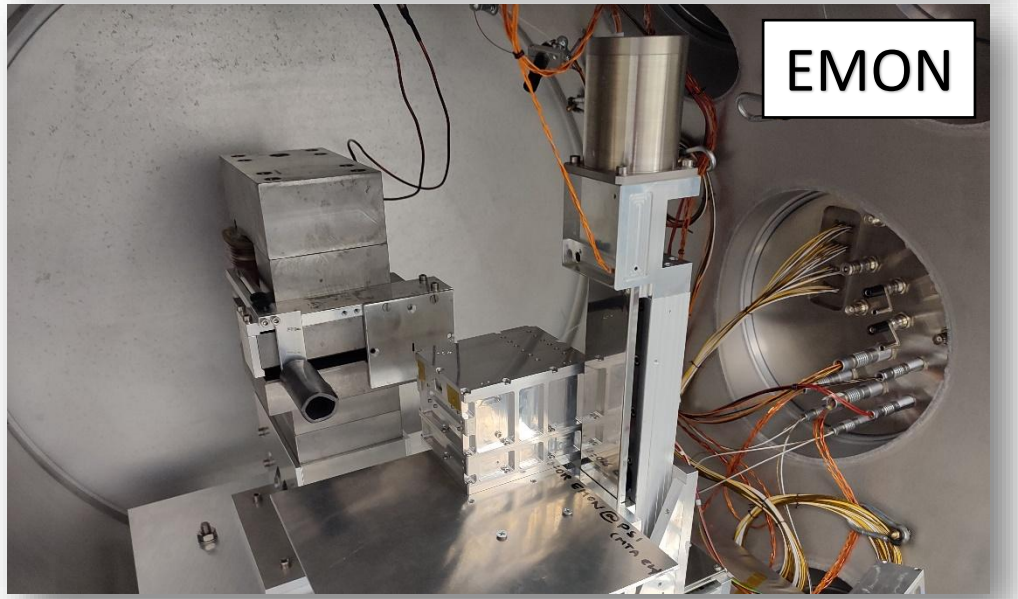

Ref.: SDT-EK-SCI-HO-0900_01_00
Template: UKL2022-EK-PQA-HO-0003_00_01

Performance tests

- We see some what more counts in other proton energy bins
- Also some contamination in electron bins (but not in the case of MC)
- Analysis and interpretation of results are on-going

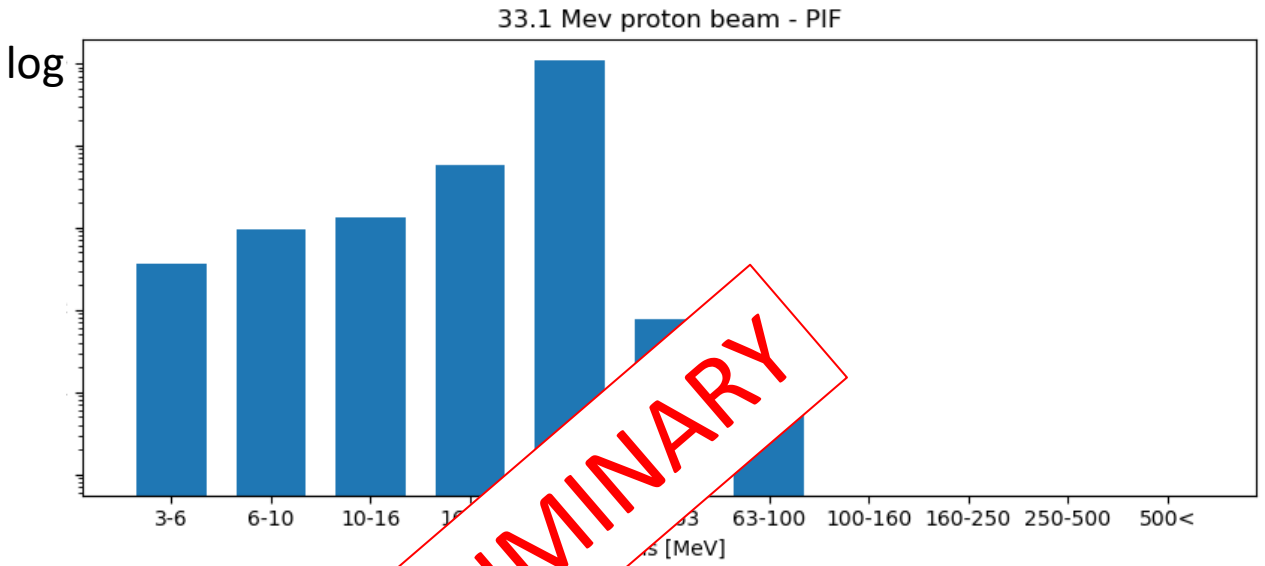

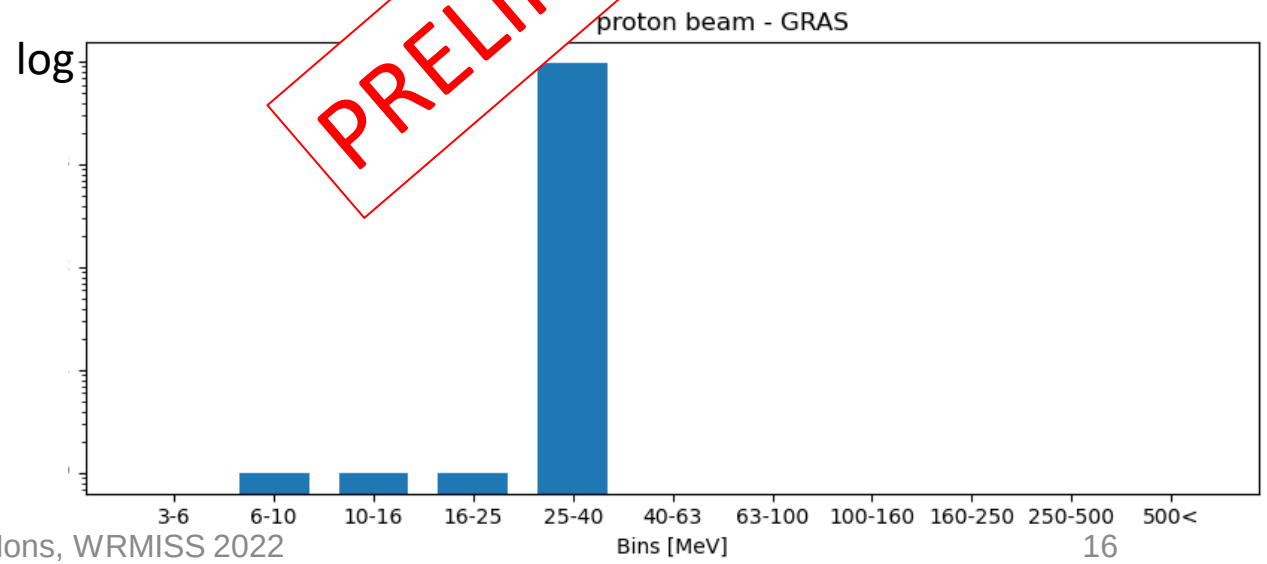

PRELIMINARY

Ref.: SDT-EK-SCI-HO-0900_01_00
Template: UKL2022-EK-PQA-HO-0003_00_01

Acknowledgements

- *The Implementation Study for the Space Dosimetry Telescope on MSR ERO was funded by ESA PRODEX Experiment Arrangement No. 4000132501.*
- *Implementation is carried out in the frame of ESA Contract No. 4000137393/22/NL/DB*

Ref.: SDT-EK-SCI-HO-0900_01_00
Template: UKL2022-EK-PQA-HO-0003_00_01

Thank you for your attention